VOLUME 01

An Addiiton for BWHS

BWHS Band Addition

1351Gamble Rd, Centerton, AR 72719

Issue Date: 04/06/2026

Project No.: 2421

CIVIL ENGINEER:

HALFF ENGINEERS
2407 SE COTTONWOOD ST. #1
BENTONVILLE, AR

STRUCTURAL ENGINEER:

TATUM-SMITH-WELCHER ENGINEERS
3100 S MARKET ST
SUITE 202
ROGERS, AR 72758

MECHANICAL / ELECTRICAL ENGINEER:

HSA ENGINEERING
7405 ELLIS ST
FORT SMITH, AR 72916

Hight Jackson ASSOCIATES
5201 W Village Parkway, Suite 300 | Rogers, Arkansas 72758 | (479) 464-4965 | www.hjarch.com

A QUALITY CONTROL CHECK, INCLUDING THE APPROPRIATE COORDINATION AMONG DISCIPLINES, HAS BEEN MADE ON THIS PROJECT'S DOCUMENTS, AND CORRECTIONS RELATED TO THIS CHECK HAVE BEEN MADE. THE UNDERSIGNED PRINCIPAL/OWNER STATES THAT THESE PLANS AND SPECIFICATIONS AS SUBMITTED FOR REVIEW ARE, TO THE BEST OF HIS OR HER KNOWLEDGE AND ABILITY, COMPLETE AND READY FOR REVIEW

REGISTERED ARCHITECT
SAM L. H. SHEPHERD
No. 3438
ARKANSAS

HIGHT JACKSON ASSOCIATES, P.A.
REGISTERED ARCHITECTS
Certificate C 349
ARKANSAS

REGISTERED ARCHITECT
TIMOTHY L. SCHMIDT
LICENSE NO. 9488
STATE OF ARKANSAS

©COPYRIGHT 2026
THESE DRAWINGS AND SPECIFICATIONS ARE THE EXCLUSIVE PROPERTY OF HIGHT JACKSON ASSOCIATES P.A. USE OR REPRODUCTION IS PROHIBITED WITHOUT WRITTEN CONSENT

Drawing Index

CIVIL
G0.1 COVER SHEET
G0.2 NOTES AND LEGEND
C1.0 TOPO EXHIBIT
C2.0 DEMOLITION PLAN
C3.0 EROSION CONTROL PLAN
C3.1 EROSION CONTROL DETAILS
C4.0 SITE DIMENSION PLAN
C5.0 GRADING AND DRAINAGE PLAN
C6.0 MISCELLANEOUS DETAILS

ARCHITECTURAL
A0.0 COVER SHEET
A1.0 ARCHITECTURAL SITE PLAN
A1.1 SITE DETAILS
A1.2 EXISTING CODE FOOTPRINT
A1.3 CODE FOOTPRINT
A2.0 DEMOLITION PLAN
A2.0A ROOF & RCP DEMO PLAN
A2.1 FIRST FLOOR PLAN
A2.2 FINISH SCHEDULE / NOTES
A2.3 SPECIALTY PLAN
A2.4 FIRST FLOOR REFLECTED CEILING PLAN
A2.5 ROOF PLAN
A2.6 ROOF DETAILS
A3.0 DOOR SCHEDULE / DOOR / WINDOW / FRAME ELEVATIONS / DETAILS
A3.1 DOOR / DETAILS
A4.1 EXTERIOR ELEVATIONS
A5.1 BUILDING SECTIONS
A5.2 WALL SECTIONS
A5.3 WALL SECTIONS
A5.4 WALL DETAILS
A7.1 INTERIOR ELEVATIONS
A7.2 INTERIOR ELEVATIONS

STRUCTURAL
S1.0 REQUIRED IBC SPECIAL INSPECTIONS
S1.1 FOUNDATION GENERAL NOTES & TYP. DETAILS
S1.2 FRAMING GENERAL NOTES & TYP. DETAILS
S2.1 FOUNDATION PLAN
S3.0 LINTEL & MASONRY PLAN & DTLS.
S3.1 ROOF FRAMING PLAN
S4.1 FOUNDATION DETAILS
S4.2 FOUNDATION DETAILS
S5.1 FRAMING DETAILS

PLUMBING
MP2.1 MECHANICAL ROOF PLAN
P1.1 PLUMBING NOTES, LEGEND, DETAILS, SCHEDULE, & DEMO PLAN
P2.1 PLUMBING PLAN
P4.1 PLUMBING RISERS

MECHANICAL
M1.1 HVAC NOTES, LEGEND, DETAILS
M2.0 MECHANICAL DEMOLITION PLAN
M2.1 HVAC PLAN AND SCHEDULES
M2.2 MECHANICAL PIPING PLAN
M3.1 MECHANICAL CONTROLS

ELECTRICAL
E1.1 ELECTRICAL LEGEND, NOTES, AND DETAILS
E2.0 ELECTRICAL DEMOLITION PLAN
E2.1 LIGHTING PLAN
E2.2 POWER PLAN
E2.3 SPECIAL SYSTEMS PLAN
E3.1 ELECTRICAL DETAILS

AUDIOVISUAL
T0.0 TECHNOLOGY SYMBOLS AND ABBREVIATIONS
T0.1 TECHNOLOGY SYMBOLS AND ABBREVIATIONS
T0.2 TECHNOLOGY SCHEDULES
T0.3 TECHNOLOGY SCHEDULES
T1.1 FIRST FLOOR PLAN - BAND ROOM - TECHNOLOGY
T2.1 FIRST FLOOR REFLECTED CEILING PLAN - BAND ROOM - TECHNOLOGY
T4.0 TECHNOLOGY ELEVATIONS
T7.0 AUDIOVISUAL SCHEMATICS, RACK ELEVATIONS, PLATES, AND PANELS
TD1.2 FIRST FLOOR PLAN - BAND ROOM - TECHNOLOGY DEMOLITION
TD2.2 FIRST FLOOR REFLECTED CEILING PLAN - BAND ROOM - TECHNOLOGY DEMOLITION

ISSUE DATE: 04/06/2026

PROJECT NO.: 2421

LARGE SCALE DEVELOPMENT PLANS
FOR

BENTONVILLE WEST HIGH SCHOOL

BAND ADDITION
CITY REVIEW

1351 GAMBLE ROAD
CENTERTON, AR
APRIL 2026

ENGINEER
HALFF
2407 SE COTTONWOOD ST STE 1
BENTONVILLE, AR 72712
CONTACT: TOM BURRY
EMAIL: TBURRY@HALFF.COM
TEL: 479-273-2209
FIRM/ BUSINESS NO.: 1470 STATE: AR

LANDSCAPE ARCHITECT
HALFF
2407 SE COTTONWOOD ST. STE. 1
BENTONVILLE, AR 72712
CONTACT: DREW DINGLER
EMAIL: DDINGLER@HALFF.COM
TEL: (479) 273-2209

SURVEYOR
HALFF
2407 SE COTTONWOOD ST. STE. 1
BENTONVILLE, AR 72712
CONTACT: JOSHUA BEMBENEK
EMAIL: JBEMBENEK@HALFF.COM
TEL: (479) 273-2209

ARCHITECT
HIGHT-JACKSON ASSOCIATES, P.A.
5201 VILLAGE PARKWAY, STE. 300
ROGERS, AR 72757
CONTACT: MICHELLE MCCLAFLIN
EMAIL: mmcclaflin@hjarch.com

SITE UTILITY CONTACTS

NATURAL GAS
BLACK HILLS ENERGY
CONTACT: JOSHUA KNIGHT
1301 FEDERAL WAY , P.O. BOX 2129
LOWELL, ARKANSAS 72745-2129
TELEPHONE: (479) 320-5091 (OFFICE)
TELEPHONE: (479) 721-4543 (CELL)
joshua.knight@blackhillscorp.com

CABLE TELEVISION
COX COMMUNICATIONS
CONTACT: LARRY ALEXANDER
4901 S. 48TH STREET
SPRINGDALE, ARKANSAS
TELEPHONE: (479) 871-7606
larry.alexander@cox.com

TELEPHONE
AT&T
CONTACT: BRENT BALDWIN
1133 HAROLD STREET
FAYETTEVILLE, ARKANSAS 72703
TELEPHONE: (479) 571-6609 (OFFICE)
bb6858@att.com

WATER & SEWER
CENTERTON UTILITIES
CONTACT: MALCOLM ATTWOOD, PE, DIRECTOR
517 N. MAIN ST.
CENTERTON, AR 72719
TELEPHONE: (479) 795-0222
MALCOLM@CUAR.US
ELECTRIC
AEP-SWEPCO
415 W STRIBLING DR.
ROGERS, AR 72764
CONTACT: CHRIS ANDREOLLI (<50 LOTS)
TELEPHONE: (479) 986-1004
CONTACT: RON R BERTRAM (>50 LOTS)
TELEPHONE: (479) 973-2333

DEPARTMENT OF HEALTH
ARKANSAS DEPARTMENT OF HEALTH
DIVISION OF ENGINEERING, SLOT 37
4815 W. MARKHAM
LITTLE ROCK, AR 72205
TELEPHONE: (501) 661-2623

GOVERNING AGENCIES

CITY OF CENTERTON

PLANNING & DEVELOPMENT
CONTACT: LORENE BURNS
200 MUNICIPAL DRIVE
CENTERTON, ARKANSAS 72719
TELEPHONE: (479) 795-2750 EXT. 302
planning@centertonar.gov
PUBLIC WORKS DEPARTMENT
CONTACT: ANTHONY MARTINEZ
11509 HWY 72 WEST
CENTERTON, ARKANSAS 72719
TELEPHONE: (479) 224-6028
amartinez@centertonar.gov
CITY ENGINEER
CONTACT: ALAN CRAIGHEAD
200 MUNICIPAL DRIVE
CENTERTON, ARKANSAS 72719
TELEPHONE: (479) 795-2750
ACraighead@centertonar.gov

BUILDING DEPARTMENT
CONTACT: ROBERT COFFELT
200 MUNICIPAL DRIVE
CENTERTON, ARKANSAS 72719
TELEPHONE: (479) 795-2750 EXT. 25
rcoffelt@centertonar.gov

CENTERTON FIRE DEPARTMENT
CONTACT: PAUL HIGGINBOTHAM
755 W. CENTERTON BLVD.
CENTERTON, ARKANSAS 72719
TELEPHONE: (479) 795-2550
phigginbotham@centertonfire.com

PROJECT SITE

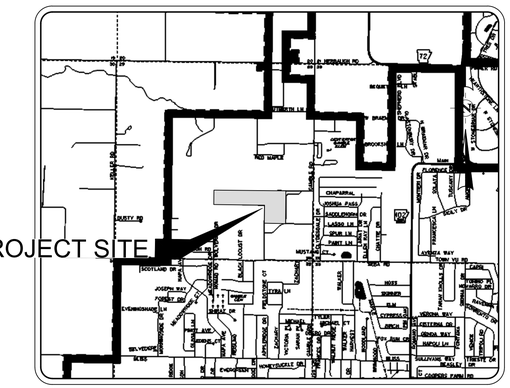

LOCATION MAP
NOT TO SCALE

Sheet List Table	
Sheet Number	Sheet Title
G0.1	COVER SHEET
G0.2	NOTES AND LEGEND
C1.0	TOPO EXHIBIT
C2.0	DEMOLITION PLAN
C3.0	EROSION CONTROL PLAN
C3.1	EROSION CONTROL DETAILS
C4.0	SITE DIMENSION PLAN
C5.0	GRADING AND DRAINAGE PLAN
C6.0	MISCELLANEOUS DETAILS

OWNER/CLIENT:

BENTONVILLE SCHOOL DISTRICT
JANET SCHWANHAUSSER
DEPUTY SUPERINTENDENT AND CFO
500 TIGER BLVD
BENTONVILLE, AR 72712
TEL. 479-254-5019 MOBILE (479) 466-9526
jschwanhausser@bentonvillek12.org

PREPARED BY:

halff

2407 SE COTTONWOOD ST STE 1
BENTONVILLE, AR 72712
TEL. 479-273-2209 FAX --
www.halff.com

NOTE:
1. THERE ARE NO KNOWN WETLANDS ON SITE

PROPOSED USE: EDUCATION FACILITIES		
ZONING - AGRICULTURAL (A-1)		
BUILDING SETBACKS		
FRONT YARD	SIDE YARD	REAR YARD
35'	15'	25'

City of Centerton Approval: Planning Commission Approval Date: _____ Review of these plans and associated reports is limited to general compliance with jurisdictional Codes and Regulations and does not serve to warrant the Engineer's design or relieve the developers of any requirements, even if errors, omissions, or inadequacies are discovered after plan approval. The jurisdictional requirements shall govern over any conflicts with the plans or specifications and any conditions determined in the field which require changes shall be subject to further review and corrective action.

City Engineer _____ Date _____

Planning Department Director _____ Date _____

Street Department _____ Date _____

Water & Sewer Department _____ Date _____

Fire Department _____ Date _____

THE SEAL ORIGINALLY APPEARING ON THIS DOCUMENT WAS AUTHORIZED BY:
TOM BURRY 14691
NAME PE LICENSE NO.
4/6/2026
DATE
THE RECORD COPY OF THIS DRAWING IS ON FILE AT THE OFFICES OF:
HALFF
1470 AR
FIRM / BUSINESS NO. STATE

CERTIFICATE OF AUTHORIZATION
HALFF ASSOCIATES, INC.
No. 1470
ARKANSAS

STATE OF ARKANSAS
LICENSED PROFESSIONAL ENGINEER
No. 14691
THOMAS A. BURRY
04/06/2026

FEMA CERTIFICATION

BASED UPON REVIEW OF FEMA FIRM: BENTON COUNTY, ARKANSAS AND INCORPORATED AREAS, AND BY GRAPHIC PLOTTING ONLY, A PORTION OF THIS PROPERTY LIES WITHIN ZONE AE - AREAS DETERMINED TO BE INSIDE OF THE 1% ANNUAL CHANCE FLOODPLAIN, WITH BASE FLOOD ELEVATIONS DETERMINED. SURVEYOR ASSUMES NO LIABILITY FOR THE CORRECTNESS OF CITED MAP.

MAP: 05007C0070J

EFFECTIVE DATE: SEPTEMBER 28, 2007

811 Know what's below. Call before you dig.

THE INFORMATION SHOWN ON THESE DRAWINGS INDICATING SIZE, TYPE AND LOCATION OF UNDERGROUND, SURFACE, AND AERIAL UTILITIES IS NOT GUARANTEED TO BE EXACT OR COMPLETE. THE CONTRACTOR SHALL CONTACT THE "ARKANSAS 811" SYSTEM AT 1-800-482-8998 48 HOURS PRIOR TO BEGINNING ANY EXCAVATION FOR EXISTING UTILITY LOCATIONS. THE CONTRACTOR SHALL ALSO BE FULLY RESPONSIBLE FOR FIELD VERIFYING LOCATIONS AND ELEVATIONS OF ALL EXISTING UTILITIES AFFECTED BY CONSTRUCTION FOR THIS PROJECT IN ORDER TO AVOID DAMAGING THOSE UTILITIES, AND SHALL IMMEDIATELY ARRANGE FOR REPAIR AND RESTORATION OF CONTRACTOR-DAMAGED UTILITIES TO THE UTILITY COMPANY'S APPROVAL AT THE EXPENSE OF THE CONTRACTOR.

AVO: 63371.001 DATE: APRIL, 2026

FILE NAME: A:\63000s\63371\001\LD\CADD\Sheets\C-PLAN-COVR-BAND-63371.001.dwg DATE: April 3, 2026, TIME: 3:44 PM, USER: ah5174

LEGEND

	PROPOSED ASPHALT PAVING
	PROPOSED CONCRETE SIDEWALK
	PROPOSED LOT LINE
	PROPOSED CENTERLINE ALIGNMENT
	BUILDING SETBACK LINE
	PROPOSED EASEMENT LINE
	PROPOSED RIGHT-OF-WAY
RCP	PROPOSED STORM DRAIN W/SIZE AND TYPE
	PROPOSED CURB INLET OR JUNCTION BOX
	PROPOSED FLARED END SECTION
1360 / 1359	PROPOSED FINISHED GRADE CONTOUR
FFE 1357.84	FINISHED FLOOR ELEVATION
TW 1357.84	TOP OF WALL
BW 1357.84	BOTTOM OF WALL
FG 1357.84	FINISHED GRADE
TOS 1357.84	TOP OF STAIR
BOS 1357.84	BOTTOM OF STAIR
TS 1357.84	TOP SIDEWALK
EG 1353.9± MATCH EX.	MATCH EXISTING GRADE
	PROPOSED SOD
	EX. BOUNDARY LINE
	EX. ADJACENT BOUNDARY LINE
	EX. RIGHT OF WAY LINE
	EX. EASEMENT LINE
	EX. ASPHALT
	EX. GRAVEL
G	EX. GAS LINE
OHE	EX. OVERHEAD ELECTRIC LINE
24"RCP	EX. STORM DRAIN PIPE
X	EX. FENCE LINE
	EX. DITCH LINE
	EX. TREE EDGE LINE
1360 / 1359	EX. CONTOURS
	SET 1/2" REBAR W/ PS# 1507 CAP
	SET MAG NAIL W/ PS# 1507 WASHER
	EX. REBAR
	EX. NAIL
	EX. MONUMENT
T	EX. TELEPHONE PEDESTAL
FO	EX. FIBER OPTIC PEDESTAL
	EX. POWER POLE
	EX. POWER POLE W/ GUY WIRE
	EX. SIGN
V	EX. VAULT BOX
	EX. SATELLITE DISH
MB	EX. MAILBOX
(N87°47'01"W 1705.06')	RECORD BEARING & DISTANCE

EXISTING WATER & SEWER

8"W	EX. WATER LINE
8"SS>	EX. SANITARY SEWER LINE
	EX. WATER METER
	EX. FIRE HYDRANT
	EX. WATER VALVE
	EX. WATER SPIGOT

NOTE:

ALL CONSTRUCTION MATERIALS AND METHODS SHALL BE PROVIDED AND INSTALLED IN ACCORDANCE WITH THE CITY OF CENTERTON'S SUBDIVISION REGULATIONS AND SPECIFICATIONS, LATEST EDITION, AND CENTERTON UTILITIES SPECIFICATIONS DATED 11/5/19.

GENERAL NOTES:

1. STORM SEWER DISTANCES AND INVERTS ARE MEASURED FROM CENTER OF INLETS AND END OF FLARED END SECTIONS.
2. CONTRACTOR SHALL PROVIDE ACCESS TO ALL EXISTING DRIVEWAYS, STREETS AND MAILBOXES DURING CONSTRUCTION.
3. WHERE APPLICABLE, UTILITY EASEMENTS TAKE PRECEDENCE OVER BUILDING SETBACKS.
4. THE CONTRACTOR SHALL BE SOLEY RESPONSIBLE FOR CONDITIONS OF THE JOB SITE, INCLUDING SAFETY OF ALL PERSONS AND PROPERTY DURING ALL PHASES OF CONSTRUCTION OF THIS SITE. THIS REQUIREMENT SHALL APPLY CONTINUOUSLY AND SHALL NOT BE LIMITED TO CONSTRUCTION WORKING HOURS.
5. IT IS THE CONTRACTOR'S RESPONSIBILITY TO TAKE ALL PRECAUTIONS NECESSARY TO AVOID PROPERTY DAMAGE TO ADJACENT PROPERTIES DURING CONSTRUCTION PHASES OF THIS PROJECT.
6. THE CONTRACTOR SHALL COORDINATE AND COMPLY WITH ALL UTILITY COMPANIES INVOLVED IN THE PROJECT AND PAY ALL REQUIRED FEES AND COSTS.
7. UNLESS OTHERWISE NOTED, ALL CURB SHALL BE 6" TYPE "A" CONCRETE CURB & GUTTER. REFER TO DETAIL SHEETS.
8. ALL CONSTRUCTION SHALL CONFORM TO THE CITY OF CENTERTON'S DEVELOPMENT REGULATIONS.
9. ALL SIGNS, PAVEMENT MARKINGS AND STRIPING SHALL CONFORM TO THE MANUAL OF UNIFORM TRAFFIC CONTROL DEVICES (MUTCD) STANDARDS AND REGULATIONS.
10. ANY FENCES LOCATED INSIDE TEMPORARY CONSTRUCTION EASEMENTS THAT ARE DISTURBED DURING CONSTURCTION SHALL BE REPLACE.
11. THERE ARE NO KNOWN WETLANDS ON THIS SITE.

SITE UTILITY GENERAL NOTES:

1. EXISTING UTILITIES ACROSS OR ALONG THE LINE OF THE PROPOSED WORK ARE SHOWN ONLY IN AN APPROXIMATE LOCATION ON THESE PLANS. THE CONTRACTOR SHALL CALL THE STATE ONE-CALL SYSTEM PRIOR TO CONSTRUCTION @ 1-800-482-8998. THE CONTRACTOR SHALL, ON HIS OWN INITIATIVE AND AT NO ADDITIONAL COST, LOCATE ALL UNDERGROUND LINES AND STRUCTURES AS NECESSARY. THE CONTRACTOR SHALL VERIFY AND CALCULATE ALL POINTS OF CONNECTION AND ALL UTILITY CROSSINGS AND INFORM MORRISON-SHIPLEY ENGINEERS, INC. AND/OR THE OWNER OF ANY CONFLICTS OR REQUIRED DEVIATIONS FROM THE PLANS. MORRISON-SHIPLEY ENGINEERS, INC. SHALL BE HELD HARMLESS IN THE EVENT THAT THE CONTRACTOR FAILS TO MAKE SUCH NOTIFICATION.
2. ALL ELECTRIC, TELEPHONE, AND GAS EXTENSIONS INCLUDING SERVICE LINES SHALL BE CONSTRUCTED TO THE APPROPRIATE UTILITY COMPANY SPECIFICATIONS AND REQUIREMENTS. ALL UTILITY COMPANY DISCONNECTIONS SHALL BE COORDINATED WITH THE DESIGNATED UTILITY COMPANY. CONTRACTOR SHALL FURTHER COORDINATE ANY DISRUPTIONS TO EXISTING UTILITY SERVICE WITH ADJACENT PROPERTY OWNERS.
3. IT SHALL BE DISTINCTLY UNDERSTOOD THAT FAILURE TO SPECIFICALLY INDICATE WORK WHICH IS REQUIRED TO COMPLETE THIS PROJECT SHALL NOT RELIEVE THE CONTRACTOR OF HIS RESPONSIBILITY TO PERFORM SUCH.
4. IN THE EVENT CARROLL ELECTRIC COOPERATIVE REQUIRES ACCESS TO THESE FACILITIES THE OWNER WILL BE RESPONSIBLE FOR THE COST OF REMOVING AND REPLACING SIDEWALK AS REQUIRED FOR ACCESS

SITE GRADING AND DRAINAGE GENERAL NOTES:

1. NO LAND CLEARING SHALL BEGIN UNTIL ALL EROSION CONTROL MEASURES AND TREE PROTECTION FENCING HAVE BEEN INSTALLED. THE CONTRACTOR SHALL TAKE ALL PRECAUTIONS TO PREVENT SOIL SEDIMENT FROM LEAVING THE SITE. ALL EROSION CONTROL MEASURES AND TREE PROTECTION FENCING SHALL BE MAINTAINED UNTIL ALL CONTRIBUTING AREAS ARE GRADED AND STABILIZED.
2. ALL DISTURBED AREAS AND SLOPES SHALL BE GRADED SMOOTH, RECEIVE 4" TOPSOIL AND BE SEEDED OR SODDED.
3. ALL EXISTING UTILITY VAULTS, VALVES, METERS, AND BOXES TO BE ADJUSTED TO FINISHED GRADES IN ACCORDANCE WITH CITY OF CENTERTON REGULATIONS AND TO THE CORRESPONDING UTILITY COMPANY'S REQUIREMENTS.
4. NO FINISHED GRADE SLOPES SHALL EXCEED 4:1 EXCEPT IN POND AND DITCHES.
5. ALL PROPOSED SIDEWALKS, ACCESSIBLE RAMPS, AND DRAINAGE STRUCTURES IN THE STREET RIGHT-OF-WAY SHALL HAVE A MAXIMUM CROSS SLOPE OF 2%.
6. ALL DISTURBED AREAS OUTSIDE THE BUILDING LOT AREA SHALL BE STABILIZED PRIOR TO FINAL INSPECTION AND ACCEPTANCE BY CITY.
7. ALL FIELD TEST REQUIRED FOR A PROJECT SHALL BE WITNESSED BY THE CITY.
8. ALL LOTS THAT RECEIVE FILL SHALL BE PLACED IN LIFTS AND COMPACTED. A GEOTECHNICAL ENGINEER WILL BE REQUIRED TO TEST THE DENSITY OF SAID FILL. THE CITY WILL REQUIRE A COPY OF THE REPORT PRIOR TO ISSUING THE PERMIT.
9. ALL SITE GRADING AND EARTHWORK SHALL BE DONE IN ACCORDANCE WITH THE RECOMMENDATIONS IN THE GEOTECHNICAL ENGINEERING REPORT PREPARED BY MTA ENGINEERS, INC.
10. CONTRACTOR SHALL REFER TO THE GRADING SECTION OF THE GEOTECHNICAL REPORT, REFERENCED ABOVE, WHEN PLACING STRUCTURAL FILL. IN PARTICULAR WHERE THERE IS CONSIDERABLE FILL WITHIN THE STREET RIGHT OF WAY AND WHERE AN EXISTING DRAINAGE DITCH CROSSES THE RIGHT OF WAY.

NOTES AND LEGEND

halff
2407 SE COTTONWOOD ST., SUITE 1
BENTONVILLE, ARKANSAS 72712
TEL. (479) 273-2209

STATE OF ARKANSAS
LICENSED PROFESSIONAL ENGINEER
No. 14691
THOMAS A. BURRY
04/06/2026

ISSUED FOR REVIEW

Hight Jackson ASSOCIATES
5201 W Village Parkway, Suite 300 | Rogers, Arkansas 72758 | (479) 464-4965 | www.hjarch.com

A NEW ADDITION FOR BENTONVILLE WEST HIGH SCHOOL
Bentonville Public Schools
1351 Gamble Road, Centerton, AR 72719

DRAWN BY: KES
CHECK BY: TAB
ISSUE DATE: 04/06/2026
PROJECT NO.: 0000
REVISION DATES

SHEET
G0.2

COPYRIGHT 2026
THESE DRAWINGS AND SPECIFICATIONS ARE THE EXCLUSIVE PROPERTY OF HIGHT JACKSON ASSOCIATES,P.A. USE OR REPRODUCTION IS PROHIBITED WITHOUT WRITTEN CONSENT.

EXHIBIT "B"

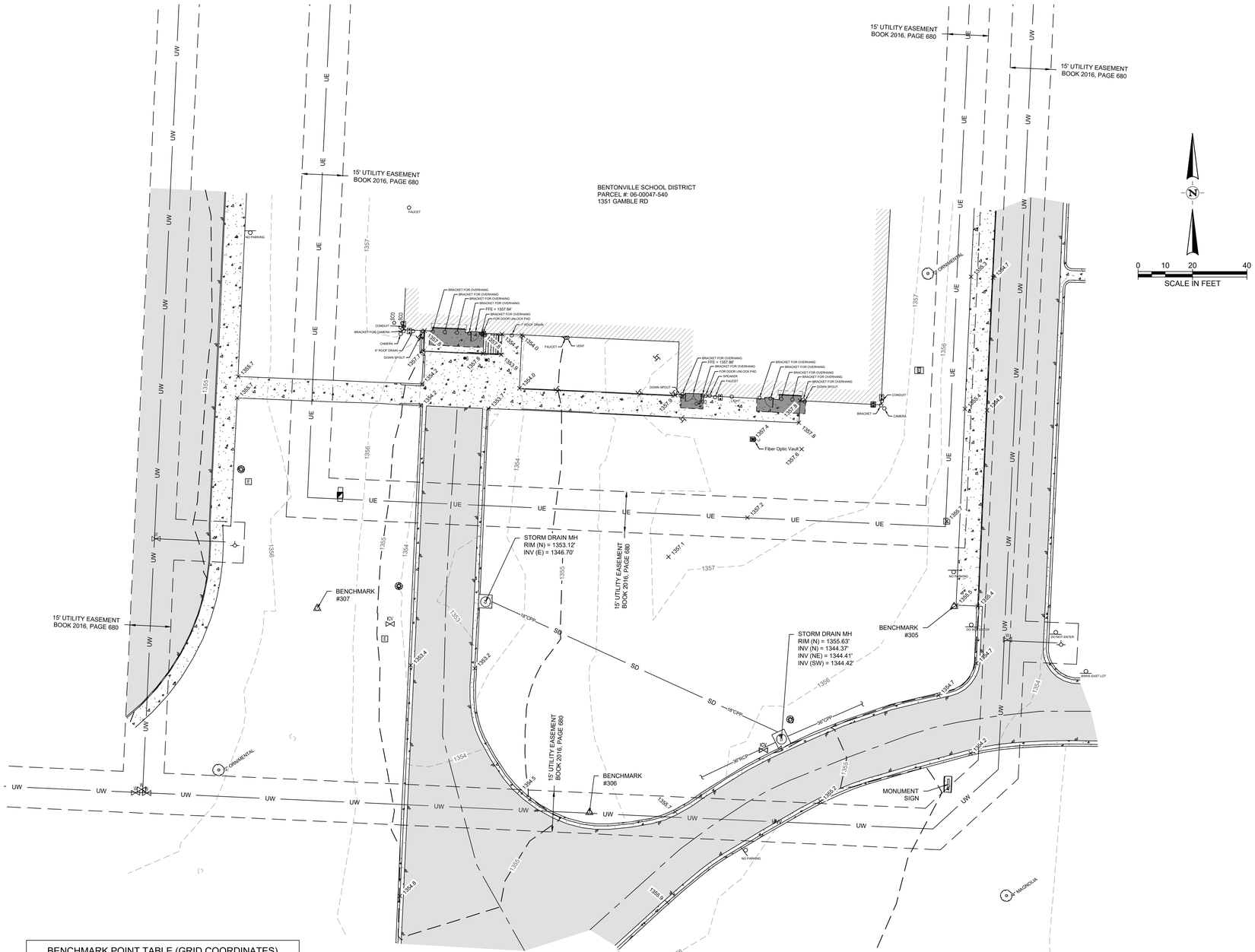

BENCHMARK POINT TABLE (GRID COORDINATES)
(Horizontal: NAD83 based on GPS observations)
(Vertical: NAVD88 based on GPS observations)

POINT NO.	GRID NORTHING	GRID EASTING	ELEVATION	DESCRIPTION
300	751,843.66	635,392.02	1,353.44	5/8" SIR W/TP CAP
301	751,770.19	634,983.34	1,356.10	5/8" SIR W/TP CAP
302	752,044.42	634,832.13	1,353.09	5/8" SIR W/TP CAP
303	752,258.83	634,974.30	1,351.37	SET MAG NAIL TP
304	752,267.61	634,730.60	1,350.44	5/8" SIR W/TP CAP
305	751,381.21	636,397.86	1,355.30	5/8" SIR W/TP CAP
306	751,305.43	636,263.86	1,355.99	5/8" SIR W/TP CAP
307	751,380.53	636,163.86	1,356.53	5/8" SIR W/TP CAP

LEGEND:

- SECTION LINE
- QUARTER SECTION LINE
- SUBJECT BOUNDARY
- ADJACENT BOUNDARY LINE
- RIGHT-OF-WAY LINE
- ROAD CENTERLINE
- EASEMENT LINE
- MINOR CONTOUR LINE
- MAJOR CONTOUR LINE
- TREE LINE
- BASE FLOOD ELEVATION LINE
- OHU — OVERHEAD UTILITY LINE
- UE — UNDERGROUND ELECTRIC LINE
- UT — UNDERGROUND TELEPHONE LINE
- UC — UNDERGROUND COMMUNICATION LINE
- UFO — UNDERGROUND FIBER OPTIC LINE
- UCTV — UNDERGROUND CABLE TV LINE
- ROOF OVERHANG
- BARBED WIRE FENCE
- CHAINLINK FENCE
- HOGWIRE FENCE
- WOOD FENCE
- METAL FENCE
- UG — UNDERGROUND GAS LINE
- SS — UNDERGROUND SEWER LINE
- SD — UNDERGROUND STORM LINE
- FLOWLINE — FLOWLINE
- UW — UNDERGROUND WATER LINE
- EW — EDGE OF WATER
- DEDICATED BOUNDARY LINE
- DEDICATED RIGHT-OF-WAY LINE
- DEDICATED EASEMENT LINE
- BENCHMARK, AS NOTED
- ELECTRIC RISER
- ELECTRIC BOX
- ELECTRIC METER
- TRANSFORMER
- LIGHT POLE
- POWER POLE
- GUY WIRE
- ELECTRIC OUTLET
- TELEVISION PEDESTAL
- TELEPHONE UTILITY SIGN
- TELEPHONE PEDESTAL
- FIBER OPTIC UTILITY SIGN
- FIBER OPTIC PEDESTAL
- TELEPHONE VAULT
- FIBER OPTIC VAULT
- COMMUNICATION VAULT
- PROPANE TANK
- NATURAL GAS SIGN
- GAS METER
- GAS VALVE
- CONTROL POINT
- TREE
- SANITARY SEWER MANHOLE
- SANITARY SEWER CLEAN OUT
- STORM DRAIN MANHOLE
- FLARED END SECTION
- WATER SIGN
- WATER VALVE
- IRRIGATION CONTROL VALVE
- WATER METER
- FIRE HYDRANT
- WCO — WATER CLEAN OUT
- WATER SPIGOT
- FP — FLAG POLE
- ANTENNA TOWER
- BOLLARD
- SIGN
- MB — MAILBOX
- AC — AIR CONDITIONER
- KP — KEY PAD
- 1351.4 — SPOT ELEVATION
- FOUND RAILROAD SPIKE, AS NOTED
- FOUND REBAR, AS NOTED
- FOUND NAIL, AS NOTED
- FOUND MONUMENT, AS NOTED
- SET 5/8" REBAR W/ PS 1913 CAP
- SET MAG NAIL W/ PS 1913 WASHER
- FCP — FENCE CORNER POST
- PVC — POLYVINYL CHLORIDE PIPE
- RCP — REINFORCED CONCRETE PIPE
- CMP — CORRUGATED METAL PIPE
- CPP — CORRUGATED PLASTIC PIPE
- **POC** — POINT OF COMMENCEMENT
- **POB** — POINT OF BEGINNING
- FF — FINISHED FLOOR

ASPHALT | CONCRETE | GRAVEL / DIRT | LANDSCAPE | BUILDING | RIP-RAP

BENTONVILLE WEST HIGH SCHOOL

1351 GAMBLE ROAD
SITUATED IN
SOUTHEAST QUARTER OF
SECTION 29, T-20-N, R-31-W
CENTERTON, BENTON COUNTY, ARKANSAS

halff
2407 SE COTTONWOOD ST.
SUITE 1
BENTONVILLE, AR 72712
TEL: (479) 273-2209

REVISION		
NO.	DATE	DESCRIPTION

PRELIMINARY
FOR INTERIM REVIEW ONLY

THESE DOCUMENTS ARE FOR INTERIM REVIEW AND NOT INTENDED FOR REGULATORY APPROVAL, PERMIT, BIDDING OR CONSTRUCTION PURPOSES. THEY WERE PREPARED BY OR UNDER THE SUPERVISION OF:

NAME — LICENSE No.
NAME — XX LICENSE NO.
1/12/2026
DATE
XX — XX
FIRM / BUSINESS NO. — STATE

PROJECT NO.:	63371.001
ISSUED:	1/9/2026
DRAWN BY:	JDS
CHECKED BY:	JBB
SCALE:	1" = 20'
SHEET TITLE:	EXHIBIT

FILE NAME: A:\63000s\63371\001\SURV\CADD\Sheets\V-EXHIBIT-63371.001.dwg DATE: January 12, 2026, TIME: 8:11 AM, USER: ah5174

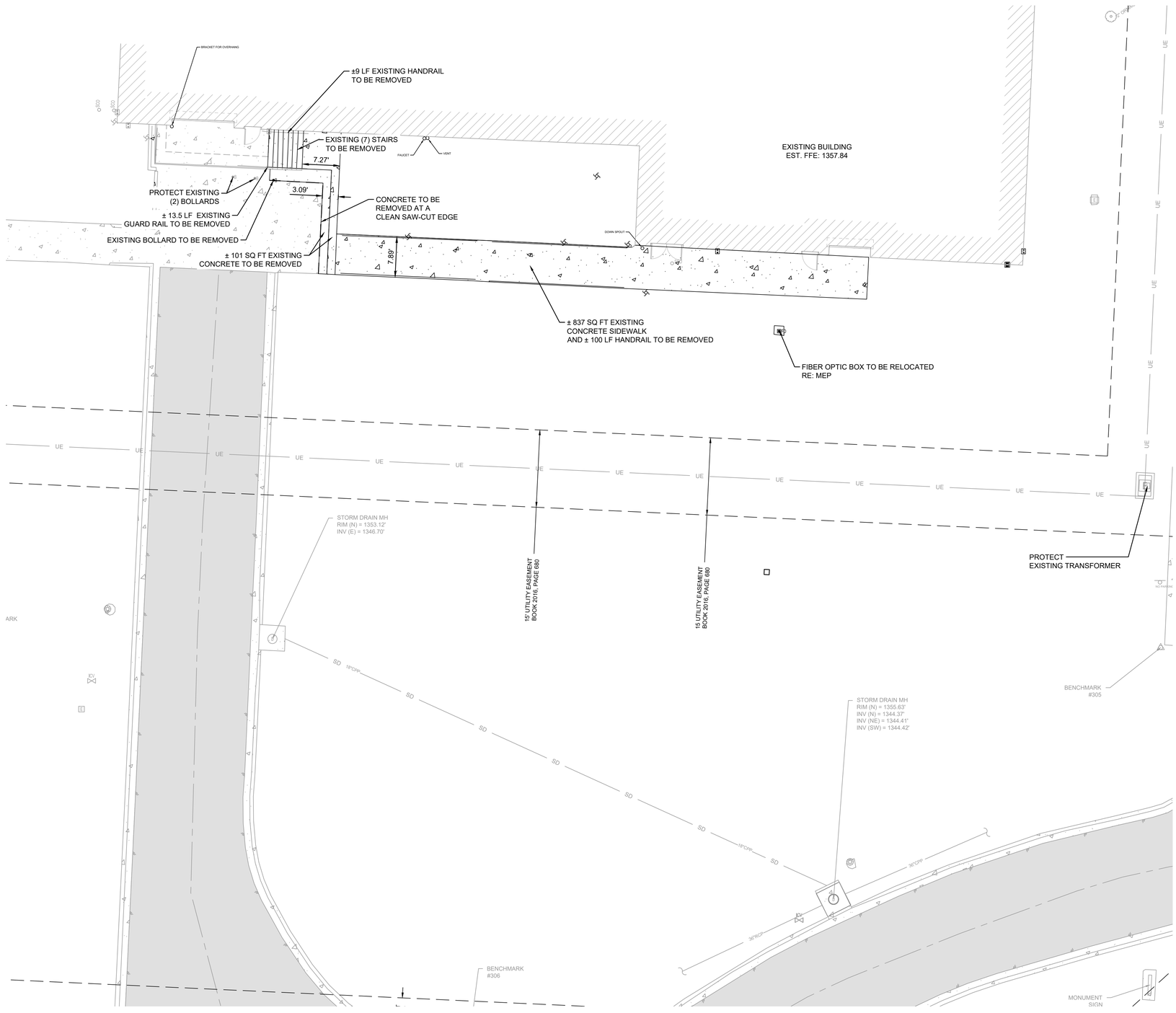

0 5 10 20
SCALE IN FEET

STATE OF ARKANSAS
LICENSED PROFESSIONAL ENGINEER
No. 14691
THOMAS A. BURRY
04/06/2026

ISSUED FOR REVIEW

Hight Jackson ASSOCIATES
5201 W Village Parkway, Suite 300 I Rogers, Arkansas 72758 I (479) 464-4965 I www.hjarch.com

A NEW ADDITION FOR BENTONVILLE WEST HIGH SCHOOL

Bentonville Public Schools

1351 Gamble Road, Centerton, AR 72719

DRAWN BY,
KES
CHECK BY,
TAB
ISSUE DATE
04/06/2026
PROJECT NO.
0000
REVISION DATES

DEMOLITION PLAN

halff
2407 SE COTTONWOOD ST., SUITE 1
BENTONVILLE, ARKANSAS 72712
TEL. (479) 273-2209

SHEET
C2.0

COPYRIGHT 2026
THESE DRAWINGS AND SPECIFICATIONS ARE THE EXCLUSIVE PROPERTY OF HIGHT JACKSON ASSOCIATES,P.A. USE OR REPRODUCTION IS PROHIBITED WITHOUT WRITTEN CONSENT

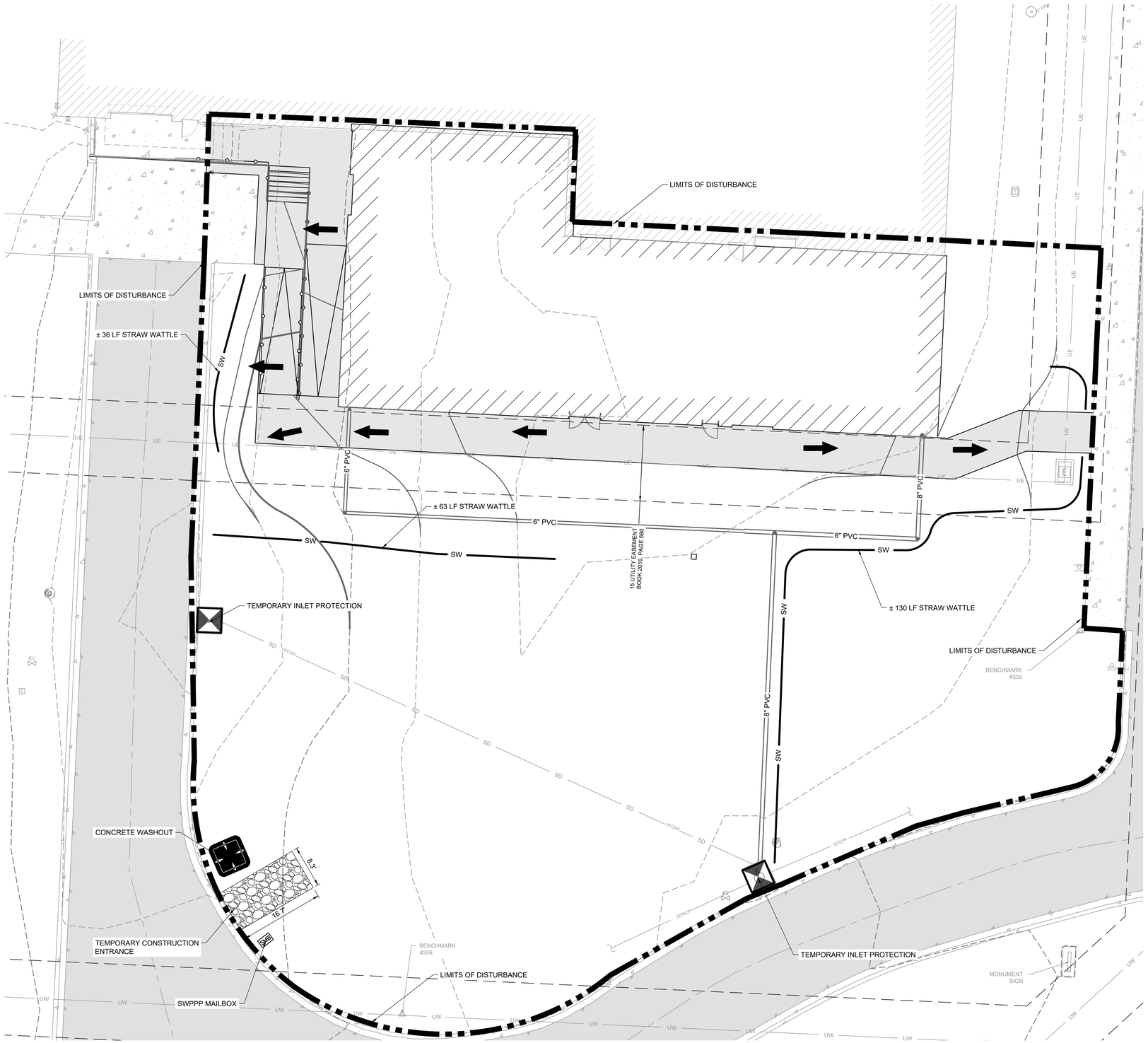

LIMITS OF DISTURBANCE: .59 ACRES

0 5 10 20
SCALE IN FEET

LEGEND

SW	PROPOSED STRAW WATTLE
	LIMITS OF DISTURBANCE
	TEMPORARY CONSTRUCTION ENTRANCE
	INLET PROTECTION
SMB	SWPPP MAILBOX
	FLOW ARROW
	CONCRETE WASHOUT

EROSION CONTROL PLAN

halff
2407 SE COTTONWOOD ST., SUITE 1
BENTONVILLE, ARKANSAS 72712
TEL. (479) 273-2209

STATE OF ARKANSAS
LICENSED PROFESSIONAL ENGINEER
No. 14691
THOMAS A. BURRY
04/06/2026

ISSUED FOR REVIEW

Hight Jackson ASSOCIATES
5201 W Village Parkway, Suite 300 | Rogers, Arkansas 72758 | (479) 464-4965 | www.hjarch.com

A NEW ADDITION FOR BENTONVILLE WEST HIGH SCHOOL
Bentonville Public Schools
1351 Gamble Road, Centerton, AR 72719

DRAWN BY: KES
CHECK BY: TAB
ISSUE DATE: 04/06/2026
PROJECT NO.: 0000
REVISION DATES

SHEET
C3.0

COPYRIGHT 2026
THESE DRAWINGS AND SPECIFICATIONS ARE THE EXCLUSIVE PROPERTY OF HIGHT JACKSON ASSOCIATES,PA. USE OR REPRODUCTION IS PROHIBITED WITHOUT WRITTEN CONSENT.

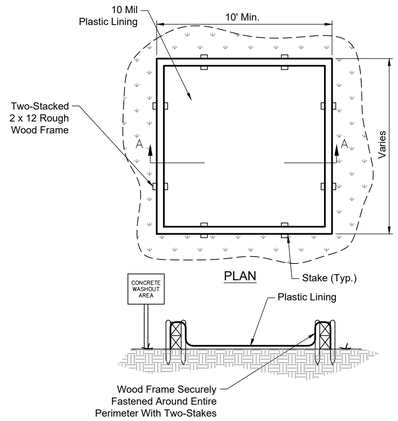

NOTES:

1. Concrete Washout Area Shall be Installed Prior to Any Concrete Placement on Site.
2. Vehicle Tracking Control is Required at Concrete Washout Entrance if Access to Concrete Washout Area is Off Pavement.
3. The Concrete Washout Area Shall Be Repaired and/or Enlarged as Necessary to Maintain Capacity for Waste Concrete.
4. Waste Material From Concrete Washout Operations Must Be Removed and Legally Disposed of When it has Accumulated Two-Thirds of the Wet Storage Capacity of the Structure.
5. At the End of Construction, All Concrete Shall Be Removed From the Site and Legally Disposed of at an Approved Waste Site.
6. When the Concrete Washout Area is Removed, the Disturbed Area Shall Be Seeded and Mulched or Otherwise Stabilized.

CONCRETE WASHOUT AREA

Not to Scale 4-21-10

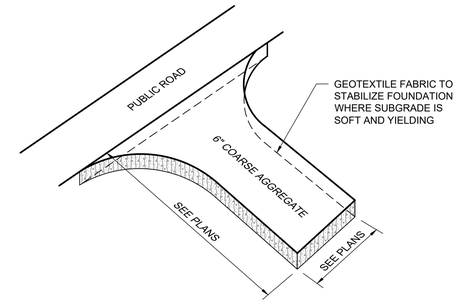

NOTES:

1. COARSE AGGREGATE SHALL BE 3" TO 6" CRUSHED STONE.
2. CLEAR THE ENTRANCE OR EXIT AREA OF ALL VEGETATION, ROOTS, AND OTHER OBJECTIONABLE MATERIAL AND EXCAVATE TO GRADE.
3. PLACE THE AGGREGATE TO THE GRADE AND DIMENSIONS SHOWN ON THE PLANS.
4. MAINTAIN THE GRAVEL PAD IN A CONDITION TO PREVENT MUD OR SEDIMENT FROM LEAVING THE SITE. IMMEDIATELY REMOVE ALL OBJECTIONABLE MATERIALS SPILLED, WASHED, OR TRACKED ONTO PUBLIC ROADWAYS.

EC-30: TEMPORARY CONSTRUCTION ENTRANCE

NOT TO SCALE 4-3-2024

SITE EROSION CONTROL GENERAL NOTES:

1. STABILIZATION MEASURES SHALL BE INITIATED AS SOON AS PRACTICABLE IN PORTIONS OF THE SITE WHERE CONSTRUCTION ACTIVITIES HAVE TEMPORARILY OR PERMANENTLY CEASED, BUT IN NO CASE MORE THAN FOURTEEN (14) DAYS AFTER WORK HAS CEASED, UNLESS ACTIVITY IN THAT PORTION OF THE SITE WILL RESUME WITHIN TWENTY-ONE (21) DAYS. FOLLOWING INITIAL SOIL DISTURBANCE OR REDISTURBANCE, PERMANENT OR TEMPORARY STABILIZATION SHALL BE COMPLETED WITHIN SEVEN CALENDAR DAYS FOR THE SURFACE OF ALL PERIMETER SLOPES
2. ALL SEDIMENT AND EROSION CONTROL DEVICES SHALL BE INSPECTED EVERY SEVEN (7) DAYS OR EVERY 14 DAYS AND AFTER EACH RAINFALL OCCURRENCE THAT EXCEEDS ONE-QUARTER (0.25) INCH. DAMAGED OR INEFFECTIVE DEVICES SHALL BE REPAIRED OR REPLACED, AS NECESSARY.
3. PROVIDE TIRE WASH, SILT FENCE, INLET PROTECTION, AND/OR OTHER EROSION CONTROL DEVICES, AS MAY BE REQUIRED, TO CONTROL SOIL EROSION DURING ALL PHASES OF CONSTRUCTION. ALL DISTURBED AREAS SHALL BE CLEANED OF DEBRIS, FINISH GRADED, AND STABILIZED WITH PERMANENT VEGETATION IMMEDIATELY AFTER COMPLETION OF CONSTRUCTION.
4. ALL EROSION CONTROL DEVICES SHALL BE PROPERLY MAINTAINED UNTIL THE COMPLETION OF ALL PHASES OF CONSTRUCTION AND ALL DISTURBED AREAS HAVE BEEN STABILIZED. ADDITIONAL CONTROL DEVICES MAY BE REQUIRED DURING CONSTRUCTION IN ORDER TO CONTROL EROSION AND/OR OFF-SITE SEDIMENTATION. ALL TEMPORARY CONTROL DEVICES SHALL BE REMOVED ONCE PERMANENT VEGETATION IS ESTABLISHED.
5. ALL DISTURBED AREAS NOT TO BE PAVED OR LANDSCAPE BEDS SHALL BE SODDED.
6. ANY TOPSOIL STOCKPILE SHALL BE GRADED TO DRAIN AND SEEDED WITH A TEMPORARY SEED MIX.
7. DUST CONTROL ON-SITE SHALL BE MINIMIZED BY SPRAYING WATER ON DRY AREAS OF THE SITE. THE USE OF OILS AND OTHER PETROLEUM BASED OR TOXIC LIQUIDS FOR DUST SUPPRESSION IS PROHIBITED.
8. IF THE MAJORITY OF MUD OR DIRT IS NOT REMOVED FROM TRAFFIC EXITS, CONTRACTOR SHALL ESTABLISH ADDITIONAL VEHICLE WASH AREAS AT CONSTRUCTION TRAFFIC EXIT POINTS. RINSE-OFF WILL NOT BE ALLOWED OUTSIDE THE PROJECT CONSTRUCTION LIMITS. ANY DIRT OR MUD TRACKED ONTO ADJACENT ROADWAY SHALL BE PICKED/SWEPT UP IMMEDIATELY.
9. ALL EROSION AND SEDIMENTATION CONTROLS SHOWN ON THE PLANS SHALL BE CONSTRUCTED IN ACCORDANCE WITH GOVERNING AUTHORITIES AND MAINTAINED AS PART OF THIS CONTRACT. CONTRACTOR TO INSTALL EROSION CONTROL IN ACCORDANCE WITH THE EROSION SEDIMENTATION CONTROL PLAN AS A MINIMUM. OTHER MEASURES MAY BE REQUIRED TO ASSURE THAT SILT IS CONTROLLED ON-SITE.

SITE SODDING NOTE:

ALL DISTURBED AREAS TO BE SODDED SHALL BE TOPSOILED TO A MINIMUM DEPTH OF 4", FERTILIZED AT A RATE OF 250 POUNDS PER ACRE, AND SODDED WITH TURF-TYPE BERMUDA GRASS. IF LOCATED ON SLOPES 3:1 OR GREATER, THE CORNERS OF THE SOD MUST BE PINNED. THE CONTRACTOR SHALL WATER AND MAINTAIN THE GRASS UNTIL A HEALTHY PERMANENT STAND IS ESTABLISHED.

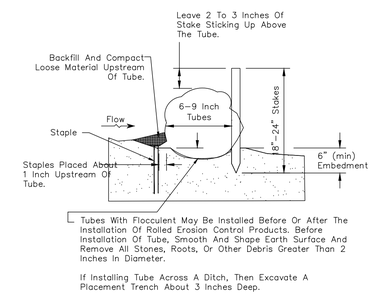

SECTION

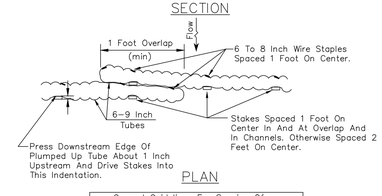

PLAN

General Guidelines For Spacing Of Tube Trenches For Slope Installations	
Slope Gradient	Tube Interval
1H:1V	15 Feet
2H:1V	25 Feet
3H:1V	35 Feet
4H:1V	50 Feet

General Guidelines For Spacing Of Tube Trenches For Channel Installations	
Slope	Tube Interval
2%	25 Feet

Replace Tubes With Flocculent Per Manufacturer's Specifications.

FIBER WATTLE

N.T.S.

EROSION CONTROL DETAILS

halff
2407 SE COTTONWOOD ST., SUITE 1
BENTONVILLE, ARKANSAS 72712
TEL. (479) 273-2209

STATE OF ARKANSAS LICENSED PROFESSIONAL ENGINEER No. 14691 THOMAS A. BURRY
04/06/2026

ISSUED FOR REVIEW

Hight Jackson ASSOCIATES
5201 W Village Parkway, Suite 300 | Rogers, Arkansas 72758 | (479) 464-4965 | www.hjarch.com

A NEW ADDITION FOR BENTONVILLE WEST HIGH SCHOOL
Bentonville Public Schools
1351 Gamble Road, Centerton, AR 72719

DRAWN BY. KES
CHECK BY. TAB
ISSUE DATE 04/06/2026
PROJECT NO. 0000
REVISION DATES

SHEET C3.1

COPYRIGHT 2026
THESE DRAWINGS AND SPECIFICATIONS ARE THE EXCLUSIVE PROPERTY OF HIGHT JACKSON ASSOCIATES PA. USE OR REPRODUCTION IS PROHIBITED WITHOUT WRITTEN CONSENT.

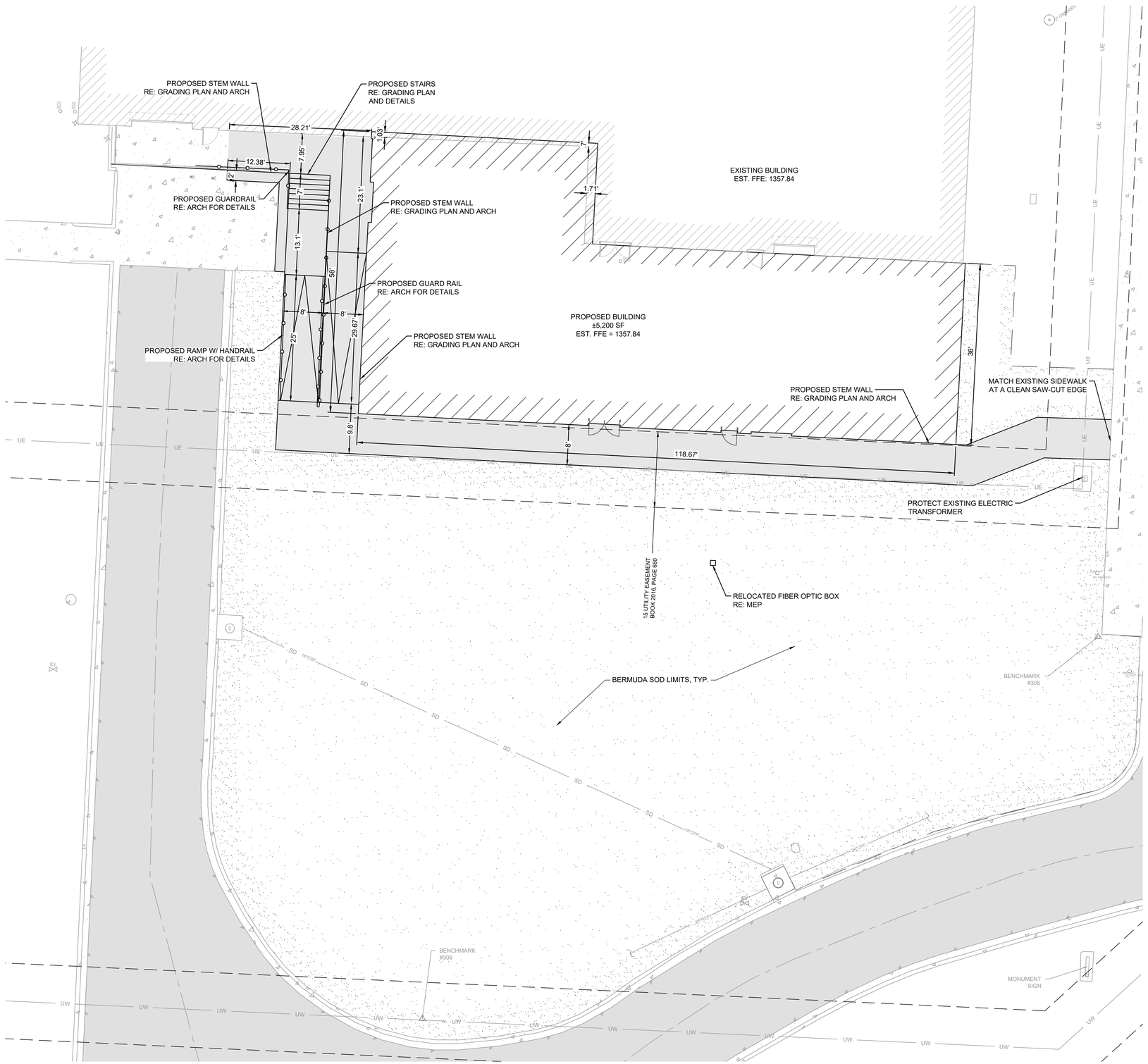

NOTE: IN THE EVENT CARROLL ELECTRIC COOPERATIVE REQUIRES ACCESS TO THESE FACILITIES THE OWNER WILL BE RESPONSIBLE FOR THE COST OF REMOVING AND REPLACING SIDEWALK AS REQUIRED FOR ACCESS

0 5 10 20
SCALE IN FEET

SITE PLAN

halff
2407 SE COTTONWOOD ST., SUITE 1
BENTONVILLE, ARKANSAS 72712
TEL. (479) 273-2209

STATE OF ARKANSAS
LICENSED PROFESSIONAL ENGINEER
No. 14691
THOMAS A. BURRY
04/06/2026

ISSUED FOR REVIEW

Hight Jackson ASSOCIATES
5201 W Village Parkway, Suite 300 | Rogers, Arkansas 72758 | (479) 464-4965 | www.hjarch.com

A NEW ADDITION FOR BENTONVILLE WEST HIGH SCHOOL
Bentonville Public Schools
1351 Gamble Road, Centerton, AR 72719

DRAWN BY: KES
CHECK BY: TAB
ISSUE DATE: 04/06/2026
PROJECT NO.: 0000
REVISION DATES

SHEET
C4.0

COPYRIGHT 2026
THESE DRAWINGS AND SPECIFICATIONS ARE THE EXCLUSIVE PROPERTY OF HIGHT JACKSON ASSOCIATES, P.A. USE OR REPRODUCTION IS PROHIBITED WITHOUT WRITTEN CONSENT

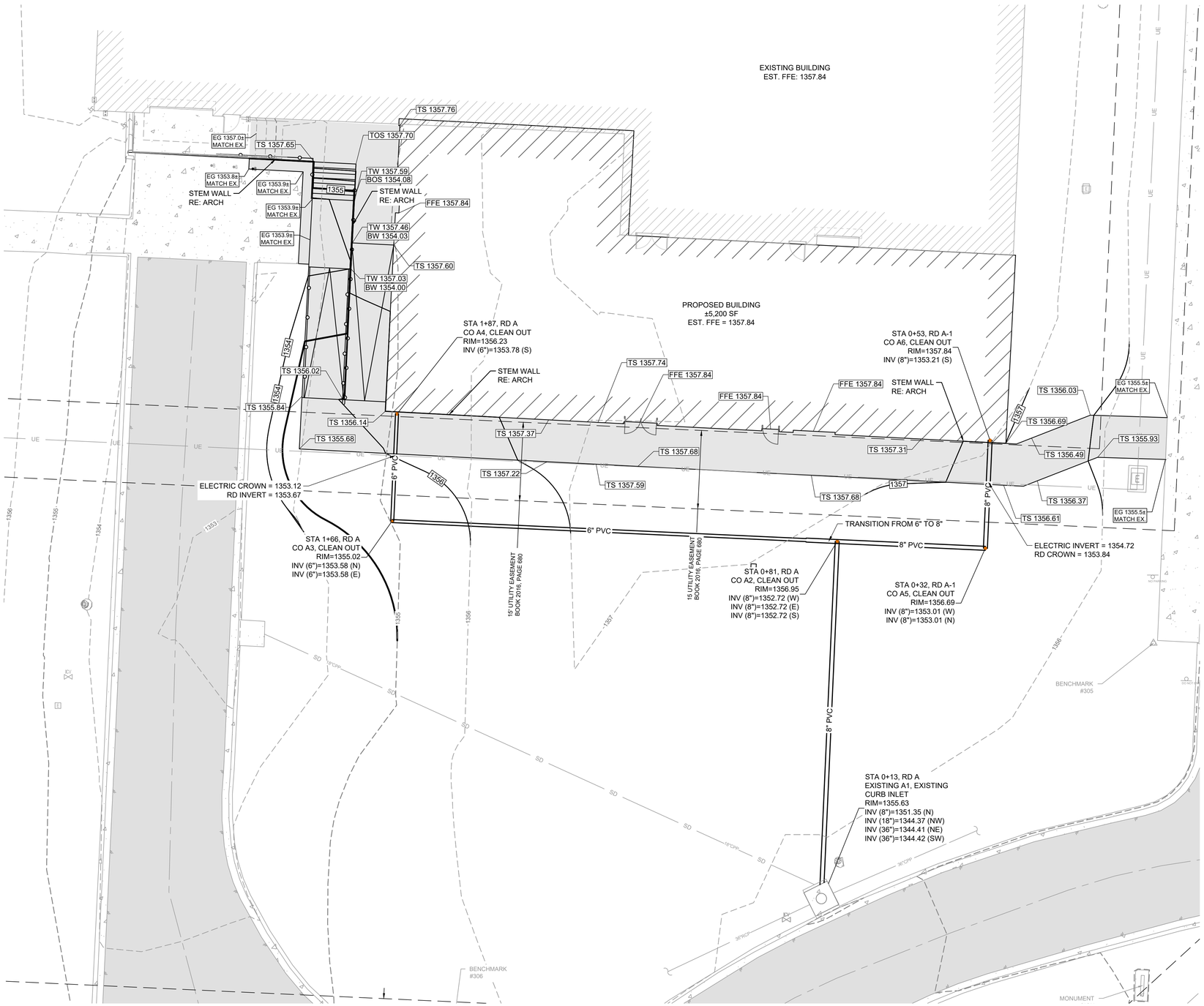

0 5 10 20
SCALE IN FEET

GRADING AND DRAINAGE PLAN

halff
2407 SE COTTONWOOD ST., SUITE 1
BENTONVILLE, ARKANSAS 72712
TEL. (479) 273-2209

STATE OF ARKANSAS
LICENSED PROFESSIONAL ENGINEER
No. 14691
THOMAS A. BURRY
04/06/2026

ISSUED FOR REVIEW

Hight Jackson ASSOCIATES
5201 W Village Parkway, Suite 300 | Rogers, Arkansas 72758 | (479) 464-4965 | www.hjarch.com

A NEW ADDITION FOR BENTONVILLE WEST HIGH SCHOOL
Bentonville Public Schools
1351 Gamble Road, Centerton, AR 72719

DRAWN BY,
KES
CHECK BY,
TAB
ISSUE DATE
04/06/2026
PROJECT NO.
0000
REVISION DATES

SHEET
C5.0

COPYRIGHT 2026
THESE DRAWINGS AND SPECIFICATIONS ARE THE PROPERTY OF HIGHT JACKSON ASSOCIATES LLP. USE OR REPRODUCTION IS PROHIBITED WITHOUT WRITTEN CONSENT.

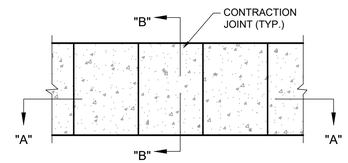

PLAN

NOTES:

1. CONCRETE REINFORCEMENT SHALL BE 6x6, W1.4xW1.4 WWF OR NO. 3 REBAR AT 24" O.C. EACH WAY PLACED AT MID-SLAB OR FIBER REINFORCEMENT.
2. TRANSVERSE CONTRACTION JOINTS SHALL BE 1/4" RADIUS TOOLED JOINTS ½" DEEP OR SAWED CONTRACTION JOINTS.
3. FULL DEPTH EXPANSION JOINTS SHALL BE PROVIDED AT A MAXIMUM SPACING OF 25'-0" O.C., AND AT THE SIDEWALK INTERFACE WITH FIXED OBJECTS.

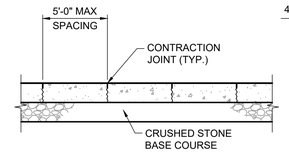

SECTION "A-A"

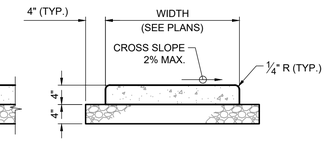

SECTION "B-B"

PS 30: CONCRETE SIDEWALK

NOT TO SCALE 4-25-2024

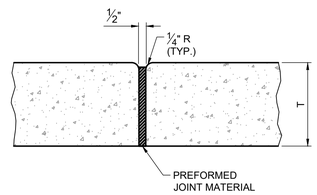

ST-110: EXPANSION JOINT

NOT TO SCALE 8-14-2024

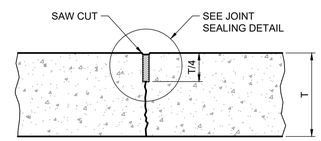

ST-60: CONTRACTION JOINT - PLAIN

NOT TO SCALE 8-9-2024

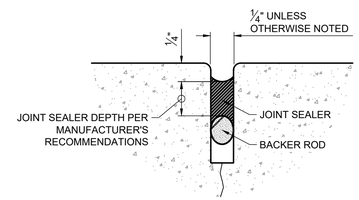

ST-120: CONCRETE JOINT SEALING

NOT TO SCALE 8-14-2024

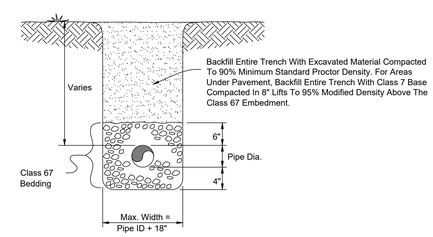

STORM SEWER BEDDING DETAIL

N.T.S

MISCELLANEOUS DETAILS

halff
2407 SE COTTONWOOD ST., SUITE 1
BENTONVILLE, ARKANSAS 72712
TEL. (479) 273-2209

STATE OF ARKANSAS LICENSED PROFESSIONAL ENGINEER No. 14691 THOMAS A. BURRY
04/06/2026

ISSUED FOR REVIEW

Hight Jackson ASSOCIATES
5201 W Village Parkway, Suite 300 I Rogers, Arkansas 72758 I (479) 464-4965 I www.hjarch.com

A NEW ADDITION FOR BENTONVILLE WEST HIGH SCHOOL
Bentonville Public Schools
1351 Gamble Road, Centerton, AR 72719

DRAWN BY. KES
CHECK BY. TAB
ISSUE DATE 04/06/2026
PROJECT NO. 0000
REVISION DATES

SHEET C6.0

COPYRIGHT 2026
THESE DRAWINGS AND SPECIFICATIONS ARE THE EXCLUSIVE PROPERTY OF HIGHT JACKSON ASSOCIATES PA. USE OR REPRODUCTION IS PROHIBITED WITHOUT WRITTEN CONSENT

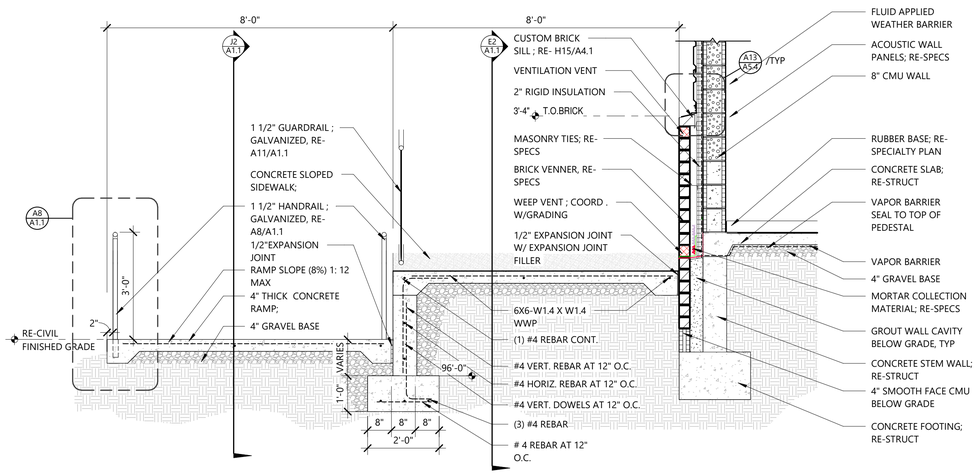

J2 Ramp Section

1/2" = 1'-0" Ref: E2/ A1.1

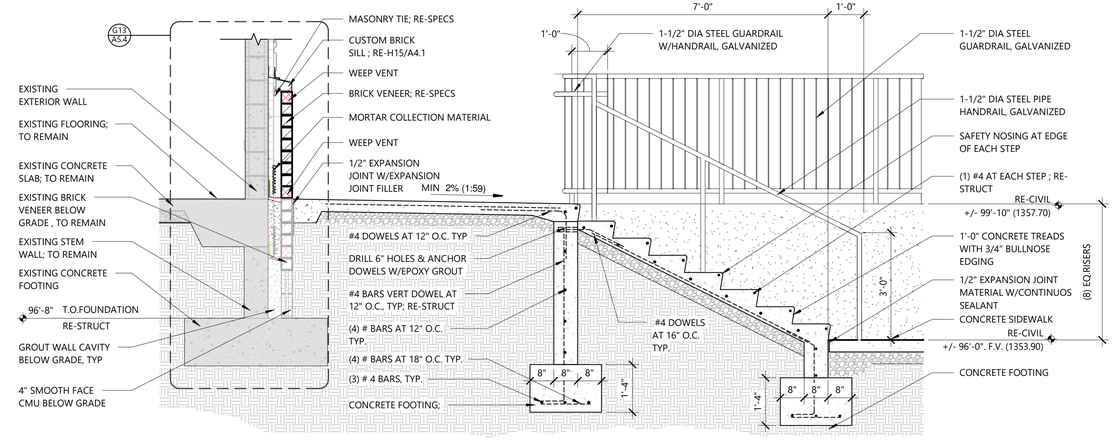

J10 Loading Dock Section

1/2" = 1'-0" Ref: J2/ A1.1

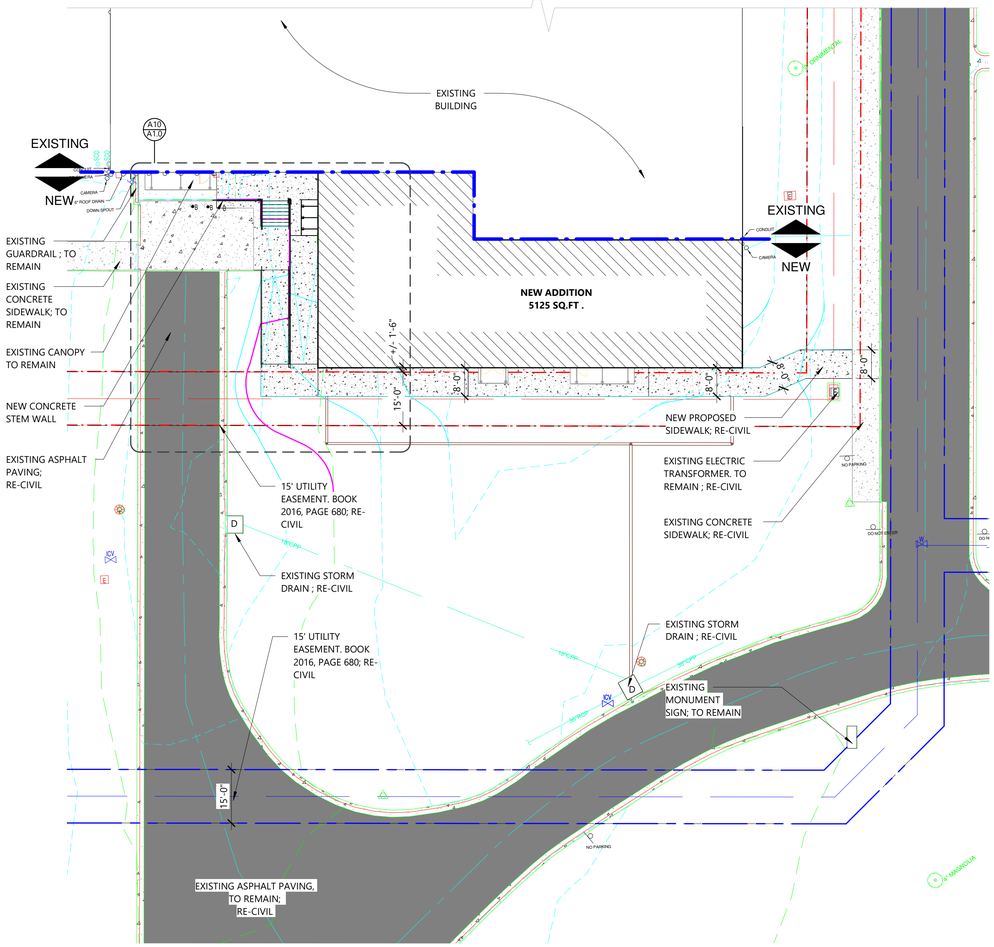

A2 Site Plan

1" = 20'-0"

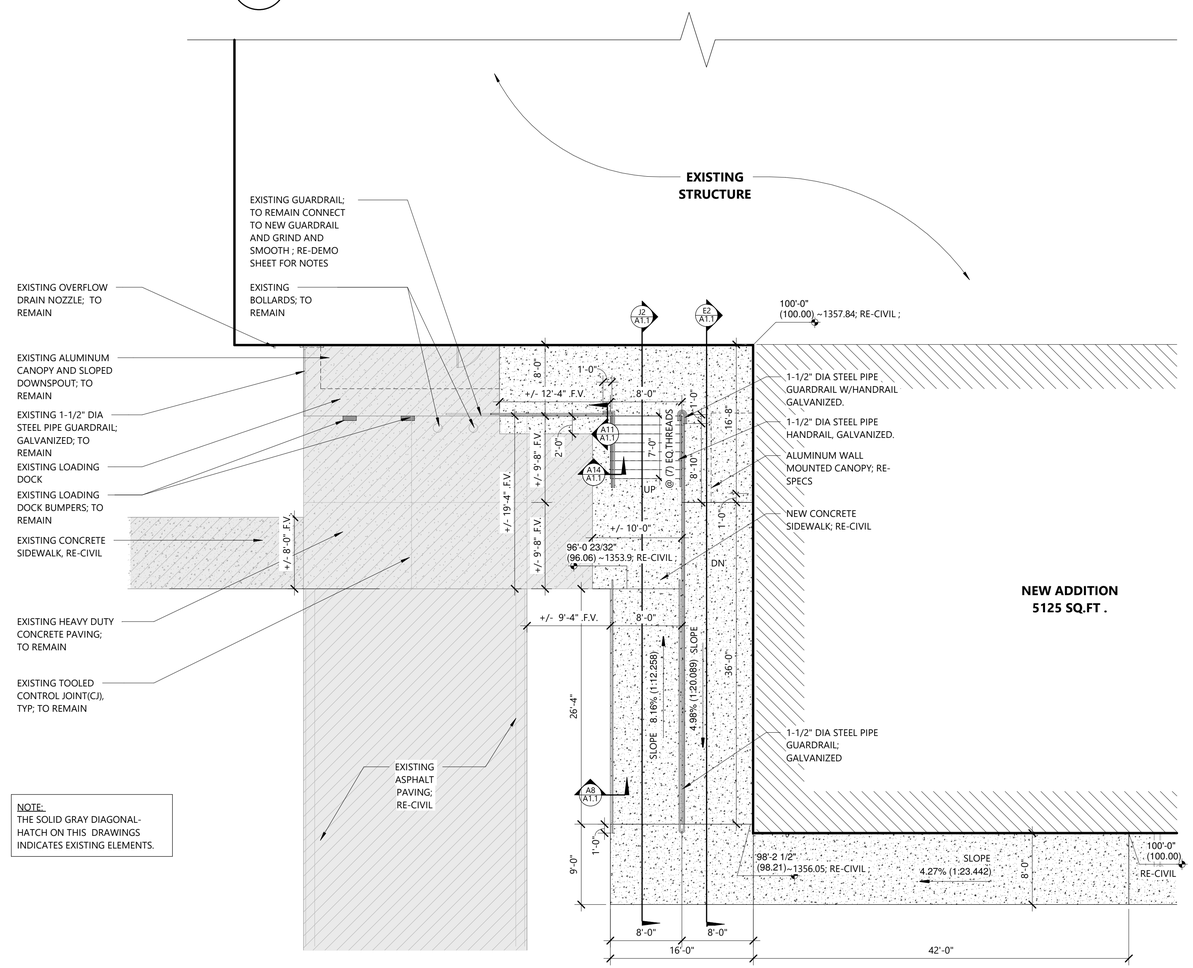

NOTE:
THE SOLID GRAY DIAGONAL-HATCH ON THIS DRAWINGS INDICATES EXISTING ELEMENTS.

A10 Enlarged Site Plan

1/8" = 1'-0" Ref: A2/ A1.0

HIGHT JACKSON ASSOCIATES, P.A. REGISTERED ARCHITECTS Certificate C 349 ARKANSAS

REGISTERED ARCHITECT TIMOTHY L. SCHMIDT LICENSE NO. 9405 ARKANSAS STATE OF ARKANSAS

Hight Jackson ASSOCIATES
5201 W Village Parkway, Suite 300 | Rogers, Arkansas 72758 | (479) 464-4965 | www.hjarch.com

An Addition for BWHS
BWHS Band Addition
1351 Gamble Rd, Centerton, AR 72719

DRAWN BY:	MS
CHECK BY:	TS
ISSUE DATE	04/06/2026
PROJECT NO.	2421
REVISION DATES	

ARCHITECTURAL SITE PLAN

S H E E T

A1.0

COPYRIGHT 2026
THESE DRAWINGS AND SPECIFICATIONS ARE THE EXCLUSIVE PROPERTY OF HIGHT JACKSON ASSOCIATES, PA. USE OR REPRODUCTION IS PROHIBITED WITHOUT WRITTEN CONSENT

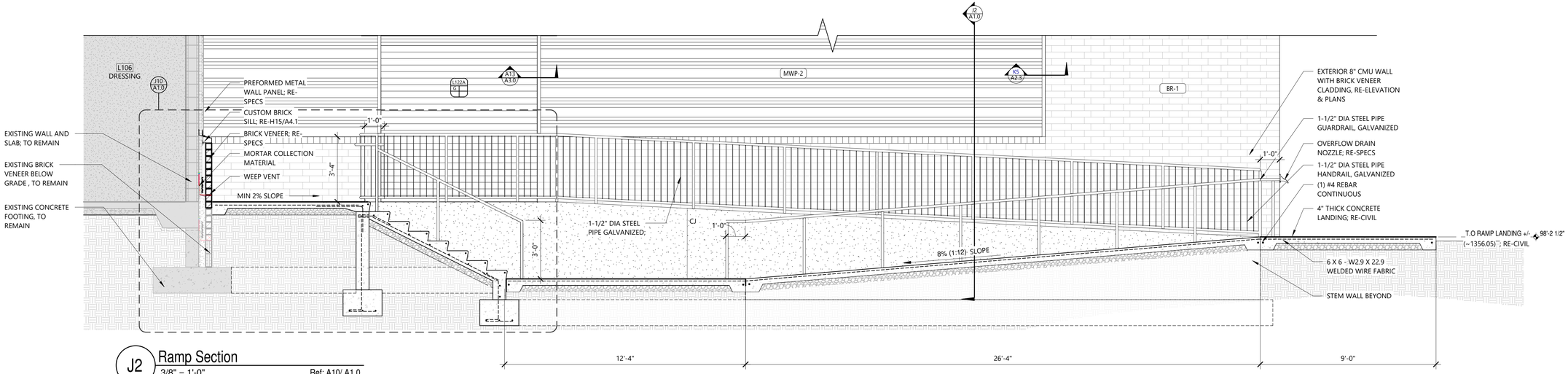

J2 Ramp Section

3/8" = 1'-0" Ref: A10/ A1.0

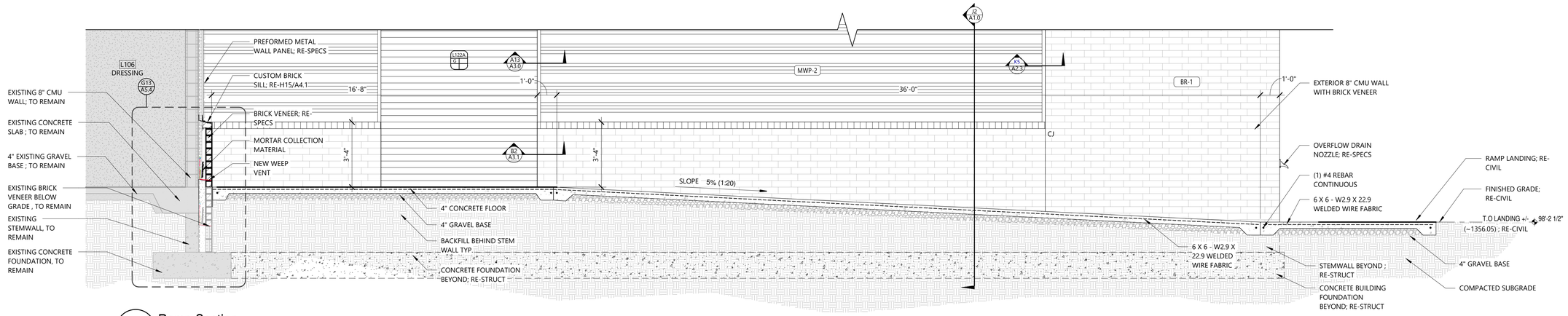

E2 Ramp Section

3/8" = 1'-0" Ref: A10/ A1.0

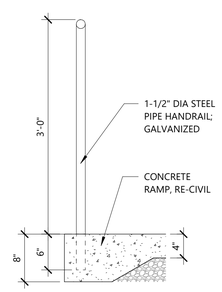

A8 Handrail Section

1" = 1'-0" Ref: A10/ A1.0

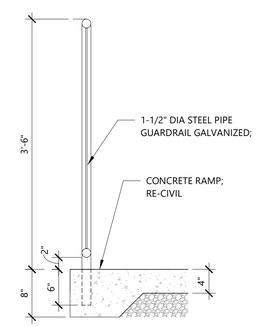

A11 Guardrail Section

1" = 1'-0" Ref: A10/ A1.0

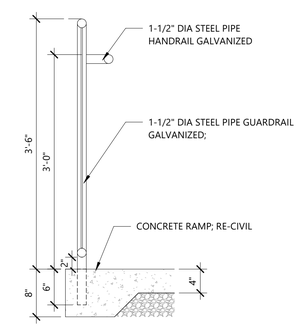

A14 Guardrail w/ Handrail Section

1" = 1'-0" Ref: A10/ A1.0

HIGHT JACKSON ASSOCIATES, P.A. REGISTERED ARCHITECTS Certificate C 349 ARKANSAS

REGISTERED ARCHITECT TIMOTHY L. SCHMIDT LICENSE NO. 9423 STATE OF ARKANSAS

Hight Jackson ASSOCIATES
5201 W Village Parkway, Suite 300 | Rogers, Arkansas 72758 | (479) 464-4965 | www.hjarch.com

An Addition for BWHS

BWHS Band Addition

1351Gamble Rd, Centerton, AR 72719

DRAWN BY: MS

CHECK BY: TS

ISSUE DATE: 04/06/2026

PROJECT NO. 2421

REVISION DATES

SITE DETAILS

SHEET A1.1

COPYRIGHT 2026
THESE DRAWINGS AND SPECIFICATIONS ARE THE EXCLUSIVE PROPERTY OF HIGHT JACKSON ASSOCIATES, PA. USE OR REPRODUCTION IS PROHIBITED WITHOUT WRITTEN CONSENT

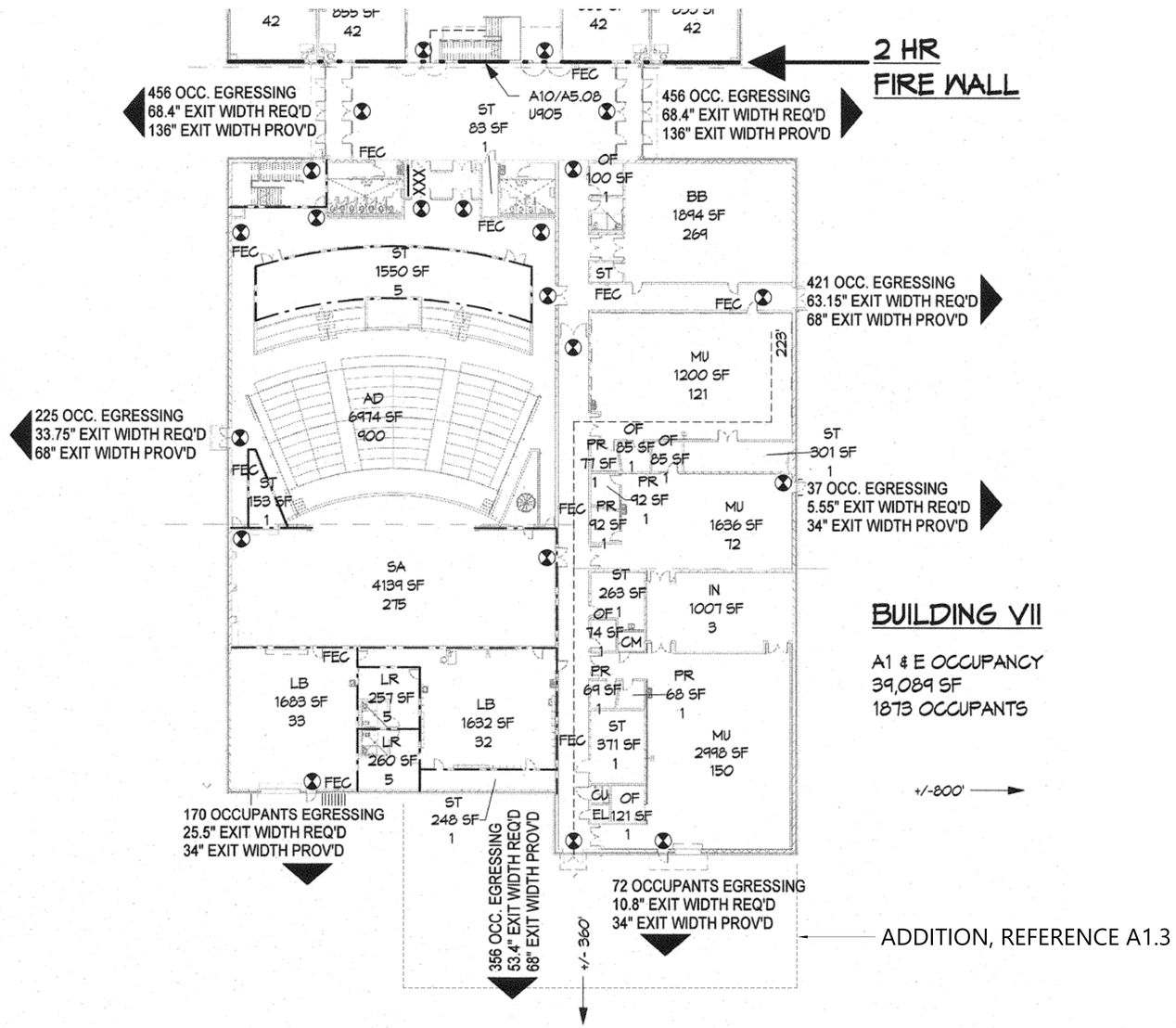

D6 Existing Code Plan
1" = 20'-0"

OCCUPANT LOAD FACTORS		
GYM FLOOR	EXERCISE ROOM	50 GROSS
GYM SEATING	ASSEMBLY - FIXED	PER 1004.4
LOCKER ROOMS	LOCKER ROOMS	50 GROSS
WEIGHT ROOM	EXERCISE ROOMS	50 GROSS
TRAINING ROOM	EDUCATIONAL - VOCATIONAL	50 NET
AUDITORIUM	ASSEMBLY - FIXED	PER 1004.4
STAGE	STAGES AND PLATFORMS	15 NET
SCENE SHOP	EDUCATIONAL - SHOP	50 NET
DRESSING/GREEN ROOM	EDUCATIONAL - VOCATIONAL	50 NET
OFFICES	BUSINESS AREAS	100 GROSS
INSTRUMENT STORAGE	ACCESSORY STORAGE	300 GROSS
MUSIC CLASSROOM	EDUCATIONAL - CLASSROOM	20 NET
CLASSROOM	EDUCATIONAL - CLASSROOM	20 NET
RESOURCE CLASSROOM	EDUCATIONAL - CLASSROOM	20 NET
LAB	EDUCATIONAL - VOCATIONAL	50 NET
STORAGE	ACCESSORY STORAGE	300 GROSS
CUSTODIAN	ACCESSORY MECHANICAL	300 GROSS
MECHANICAL/ELECTRICAL	ACCESSORY MECHANICAL	300 GROSS
KITCHEN	KITCHENS COMMERCIAL	200 GROSS
TEACHER PREP	ASSEMBLY - TABLES & CHAIRS	15 NET
SCIENCE PREP	ACCESSORY STORAGE	300 GROSS
ART CLASSROOM	EDUCATIONAL - VOCATIONAL	50 NET
READING ROOM	LIBRARY - READING ROOMS	50 NET
LECTURE HALL	ASSEMBLY - CHAIRS, NOT FIXED	7 NET
EQUIPMENT	ACCESSORY EQUIPMENT	300 GROSS
EXERCISE ROOM	EXERCISE ROOM	50 GROSS
DATA/COMMUNICATIONS	ACCESSORY EQUIPMENT	300 GROSS
CONFERENCE	ASSEMBLY - TABLES & CHAIRS	15 NET
CAFETERIA	ASSEMBLY- TABLES & CHAIRS	15 NET
BLACK BOX	ASSEMBLY - CHAIRS, NOT FIXED	7 NET
CONCESSIONS		50 GROSS

ROOM LEGEND	
AC	ART CLASSROOM
AD	AUDITORIUM
BB	BLACK BOX
BO	BUSINESS OFFICE
CA	CAFETERIA / COMMONS
CN	CONCESSIONS
CF	CONFERENCE
CR	CLASSROOM
CM	DATA/COMMUNICATION
CU	CUSTODIAL
EE	ELEVATOR EQUIPMENT
EL	ELECTRICAL
ER	EXERCISE ROOM
EQ	EQUIPMENT
EV	ELEVATOR
GM	GYMASIUM / PE
IN	INSTRUMENT
KT	KITCHEN
LB	LAB
LI	LIGHTING BOOTH
LH	LECTURE HALL
LR	LOCKER ROOM
ME	MECHANICAL
MU	MUSIC
OF	OFFICE
RD	READING ROOM
RE	RESOURCE CLASSROOM
SA	STAGE
SP	SCIENCE PREP
ST	STORAGE
TP	TEACHER PREP

SYMBOL LEGEND	
	SMOKE PARTITION
	1 HR FIRE BARRIER
	2 HR FIRE WALL
	2 HR FIRE BARRIER
X OCC. EGRESSING X" EXIT WIDTH REQ'D X" EXIT WIDTH PROV'D	DESIGNATED EXIT
XXX	MAX. OCCUPANT LOAD SIGNAGE
2	SECONDARY EXIT
X	NOT AN EXIT
	EXIT LIGHT
FEC	FIRE EXTINGUISHER CABINET
FEB-W	FIRE EXTINGUISHER BRACKET - WET CHEMICAL
	RATED GYPSUM CEILING
ROOM NAME __ SQ. FT. __ OCC. LOAD	ROOM USE, RE-- LEGEND SQUARE FEET OCCUPANCY

Building VII –
Performing Arts

Mixed Occupancy = A-1 & E
Building Type = IIB

Allowable Area (Table 503)
A-1 = 8,500 SF
E = 14,500 SF

Percentage of Frontage = 62.6%
Area Increase
A-1 = 5,321 SF
E = 9,084 SF

Increase for Sprinkler System
A-1= 17,000 SF
E= 29,000 SF

Modified Allowable Area
A-1 = 30,821 SF
E = 52,584 SF

Actual Area
A-1 = 8,868 SF
E = 30,221 SF

Ratio

8,868 / 30,821 + 30,221 / 52,584 > 1

0.288 + 0.575 = 0.86 PASS

HIGHT JACKSON ASSOCIATES, P.A.
REGISTERED ARCHITECTS
Certificate C 349
ARKANSAS

REGISTERED ARCHITECT
TIMOTHY L. SCHMIDT
LICENSE NO. 94[illegible]
STATE OF ARKANSAS

HightJackson ASSOCIATES
5201 W Village Parkway, Suite 300 | Rogers, Arkansas 72758 | (479) 464-4965 | www.hjarch.com

An Addition for BWHS
BWHS Band Addition
1351 Gamble Rd, Centerton, AR 72719

DRAWN BY: TS
CHECK BY: TS
ISSUE DATE: 04/06/2026
PROJECT NO. 2421
REVISION DATES

EXISTING CODE FOOTPRINT
SHEET
A1.2

COPYRIGHT 2026
THESE DRAWINGS AND SPECIFICATIONS ARE THE EXCLUSIVE PROPERTY OF HIGHT JACKSON ASSOCIATES PA. USE OR REPRODUCTION IS PROHIBITED WITHOUT WRITTEN CONSENT

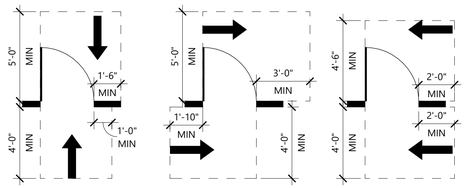

FRONT APPROACH, PULL & PUSH SIDE

HINGE APPROACH, PULL & PUSH SIDE

LATCH APPROACH, PULL & PUSH SIDE

NOTE: REFER TO SHEET **A2.5** FOR ADA MOUNTING HEIGHTS DIAGRAM

NOTE: CLEARANCES PROVIDED FOR REFERENCE. REFER TO ANSI A117.1 (CURRENT VERSION)

L4 ADA Door Clearances
1/4" = 1'-0"

OCCUPANT LOAD FACTORS

STORAGE	ACCESSORY STORAGE	300 GROSS
INSTRUMENT STORAGE	ACCESSORY STORAGE	300 GROSS
ENSEMBLE / CHANGING RM	EDUCATIONAL - VOCATIONAL	50 NET
PRACTICE	EDUCATIONAL - VOCATIONAL	50 NET
MUSIC CLASSROOM	EDUCATIONAL - CLASSROOM	20 NET
OFFICE	BUSINESS AREA	100 GROSS

ROOM LEGEND

CR	CLASSROOM
DT	DATA/COMMUNICATION
EL	ELECTRICAL
IS	INSTRUMENT STORAGE
ME	MECHANICAL
MU	MUSIC
OF	OFFICE
ST	STORAGE
EN	ENSEMBLE/ CHANGING ROOM

SYMBOL LEGEND

	DESIGNATED EXIT
# OCCUPANTS EGRESSING X" EXIT WIDTH REQ'D X" EXIT WIDTH PROV'D	
ROOM NAME __ SF __ OCC	ROOM USE, RE-- LEGEND SQUARE FEET OCCUPANCY
	EXIT SIGN
FEC	FIRE EXTINGUISHER CABINET (SEMI RECESSED)

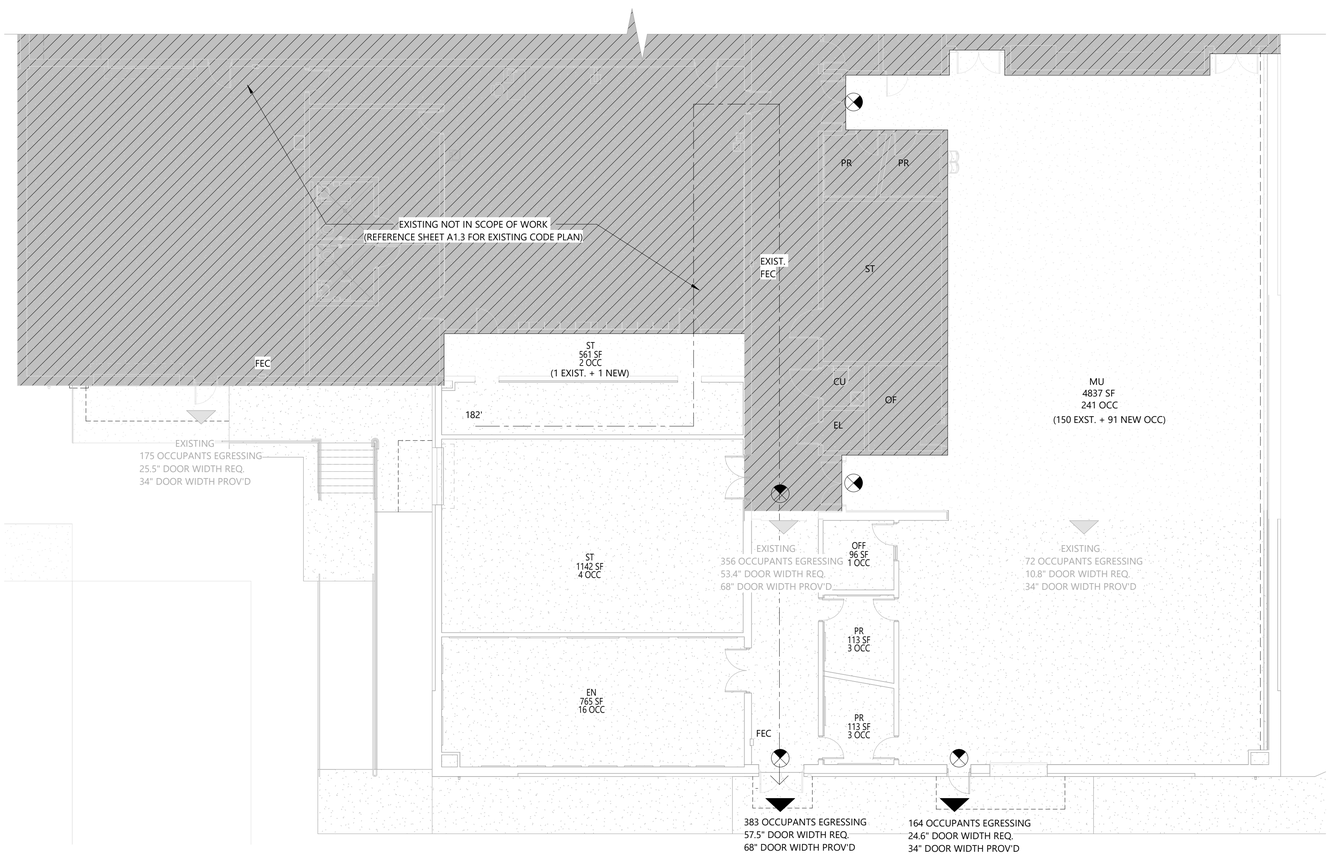

A4 First Floor Code Plan
1" = 10'-0"

TYPE OF CONSTRUCTION: TYPE IIB, SPRINKLED

FACILITY NAME: BENTONVILLE WEST HIGH SCHOOL ADDITIONS

FACILITY LOCATION:
1351 GAMBLE RD
CENTERTON, AR 72719

COUNTY: BENTON

LOCAL FIRE DEPARTMENT:
CENTERTON FIRE DEPARTMENT

WATER SUPPLY:
CENTERTON WATER AND SEWER

LOCAL BUILDING INSPECTION DEPARTMENT:
CITY OF CENTERTON BUILDING SAFETY DIVISION

APPLICABLE CODES AND REGULATIONS:
2021 ARKANSAS FIRE PREVENTION CODE
2021 INTERNATIONAL BUILDING CODE
(VOL. 2 WITH ARKANSAS STATE AMENDMENTS)
2018 ARKANSAS PLUMBING CODE
2021 INTERNATIONAL MECHANICAL CODE
2020 NATIONAL ELECTRIC CODE
2014 ARKANSAS ENERGY CODE SUPPLEMENT TO 2009 ENGERY CONSERVATION CODE

ARCHITECT CONTACT:
HIGHT JACKSON ASSOCIATES
TIM SCHMIDT
5201 WEST VILLAGE PARKWAY, SUITE 300
ROGERS, AR 72758
PHONE- (479)-464-4965
FAX- (479) 464-8324

OWNER CONTACT:
MICHAEL VELIQUETTE
BENTONVILLE SCHOOL DISTRICT
8579 WEST FORD SPRINGS ROAD
BENTONVILLE, AR 72712
PHONE- (479)-254-5085

NEW CONSTRUCTION:
OCCUPANCY TYPE- EDUCATIONAL (E)
OCCUPANT LOAD - **119 NEW +** 1873 EXISTING = 1,992
CONSTRUCTION TYPE- IIB, SPRINKLED
BASIC ALLOWABLE AREA PER STORY- 14,500 SF
SPRINKLER INCREASE = 29,000 SF
FRONTAGE INCREASE PER BUILDING = 9,084 SF (62.6%)
TOTAL ALLOWABLE AREA PER BUILDING= 52,584 (EDUCATION OCCUPANCY)

ALLOWABLE HEIGHT- 75FT
ACTUAL HEIGHT- 33FT
ALLOWABLE STORIES- 3
ACTUAL STORIES- 1
COMBINE TOTAL SQUARE FOOTAGE -
ADDITION (E): 5,126 SF
EXISTING (E) = 30,221 SF
TOTAL (E) = 35,347 SF @ BUILDING VII PERFORMING ARTS

RATIO E + A1 (REF EXISTING CODE FOOTPRINT ON A1.2)
35,347 SF / 52,584 SF = .672
.672 (E)+ .288 (A-1) = .960 (LESS THAN 1, PASS)

HORIZONTAL SEPARATION TO PROPERTY LINE- +/- 800' TO EAST PL, +/- 350' TO SOUTH PL, +/- 390' TO WEST PL, AND +/- (N/A) TO NORTH PL.

STRUCTURAL FIRE PROTECTION:
STRUCTURAL FRAME- 0 HR.
EXTERIOR BEARING WALLS- 0 HR.
INTERIOR BEARING WALLS- 0 HR.
EXTERIOR NON-BEARING WALLS- 0 HR.
INTERIOR NON-BEARING WALLS- 0 HR.
FLOORS- 0 HR.
ROOF- 0 HR.

ACTIVE FIRE SAFETY FEATURES:
FIRE SPRINKLER SYSTEM THROUGHOUT
FIRE ALARM SYSTEM- GENERATOR
SMOKE DETECTION THROUGHOUT - GENERATOR
EXIT LIGHTS- GENERATOR
EMERGENCY LIGHTING- GENERATOR

HIGHT JACKSON ASSOCIATES, P.A
REGISTERED ARCHITECTS
Certificate C 349
ARKANSAS

REGISTERED ARCHITECT
TIMOTHY L. SCHMIDT
LICENSE NO. 9400
STATE OF ARKANSAS

Hight Jackson ASSOCIATES
5201 W Village Parkway, Suite 300 | Rogers, Arkansas 72758 | (479) 464-4965 | www.hjarch.com

An Addition for BWHS
BWHS Band Addition
1351Gamble Rd, Centerton, AR 72719

DRAWN BY: TS
CHECK BY: TS
ISSUE DATE: 04/06/2026
PROJECT NO. 2421
REVISION DATES

CODE FOOTPRINT

SHEET
A1.3

COPYRIGHT 2026
THESE DRAWINGS AND SPECIFICATIONS ARE THE EXCLUSIVE PROPERTY OF HIGHT JACKSON ASSOCIATES PA. USE OR REPRODUCTION IS PROHIBITED WITHOUT WRITTEN CONSENT

Existing Storage Legend

NOTE: RE-SPECIALTY PLANS (A2.3) FOR RELOCATION OF EXISTING STORAGE UNITS FROM THE BAND ROOM TO THE INSTRUMENTAL STORAGE AREA.

- A — SOUTH WALL STORAGE
- B — NORTH WALL STORAGE
- C — NORTH WALL STORAGE 2:

Demolition Legend

- # — KEYED NOTES
- XX — PICTURE REFERENCE, RE - A2.01
- A1 / A1.1 — DEMO ELEVATION

General Demolition Notes

1. DEMOLITION NOTES ARE PROVIDED TO EXPLAIN THE ITEMS TO BE REMOVED, RELOCATED, AND/OR MODIFIED IN ORDER TO FACILITATE THE REMODEL AND NEW CONSTRUCTION. IT SHALL BE THE RESPONSIBILITY OF THE GENERAL CONTRACTOR TO PROVIDE DEMOLITION AND PATCH ITEMS, SURFACES AND AREAS AS REQUIRED TO PROVIDE NEW WORK OR TO INSTALL NEW ITEMS WHERE CALLED FOR ON THE DRAWINGS AND SPECIFICATION.
2. PRIOR TO DEMOLITION AND CONSTRUCTION, IT IS THE CONTRACTORS RESPONSIBILITY TO FIELD VERIFY THE LOCATION AND CONDITION OF ALL EXISTING UTILITIES AND ELECTRICAL ITEMS (EXTERIOR AND INTERIOR) ON THE SITE AND WITHIN THE EXISTING BUILDING(s).
3. CONTRACTOR TO VERIFY ALL UTILITY CONDITIONS. REMOVAL AND REPLACEMENT OF ANY UTILITY LINE OR CONDUIT REQUIRED TO INSTALL NEW WORK TO BE INCLUDED AS PART OF THIS BID.
4. PROTECT ALL PLUMBING, MECHANICAL, ELECTRICAL, DATA EQUIPMENT, AND OTHER ITEMS NOTED OR INDICATED TO REMAIN. REFER TO PLUMBING, MECHANICAL, AND ELECTRICAL DRAWINGS FOR ADDITIONAL NOTES. IT IS THE CONTRACTOR'S RESPONSIBILITY TO PAY FOR AND REPAIR OR REPLACE ANY ITEMS DAMAGED DURING WORK TO LIKE-NEW CONDITION PRIOR TO PROJECT CLOSE-OUT.
5. REFER TO SECTIONS, PLUMBING, MECHANICAL, AND ELECTRICAL DRAWINGS FOR ADDITIONAL DEMOLITION NOTES AND INFORMATION.
6. REPORT ANY DISCREPANCIES IMMEDIATELY TO ARCHITECT.
7. REPAIR EXISTING WALLS AT LOCATIONS OF ANY DEMOLISHED PORTIONS OF WALLS AND DOOR FRAMES AS REQUIRED FOR NEW SURFACE AND FINISH.
8. REMOVE EXISTING LIGHTS AS NOTED; RE- REFLECTED CEILING PLAN. REFER TO ELECTRICAL/LIGHTING PLAN FOR ADDITIONAL NOTES.
9. REFER TO M.E.P + A.V DEMOLITION PLANS AND NOTES FOR ADDITIONAL REMOVAL AND/OR RELOCATION OF SYSTEMS NOT NOTED IN ARCHITECTURAL
10. REPAIR WALLS AT LOCATIONS OF ANY REMOVED MECHANICAL, ELECTRICAL OR PLUMBING ITEMS, REPAIR WALLS WITH SAME MATERIAL AS ADJACENT SURFACES TO NEW CONDITION. PAINT AS REQUIRED . WHERE ITEMS ARE REMOVED IN AREAS OF CMU, FILL IN WITH CMU TO MATCH COURSING.
11. REMOVE PARTS OF EXISTING WALLS TO INSTALL NEW PLUMBING, ELECTRICAL, ETC. REFER TO M.E.P PLANS FOR NEW M.E.P LOCATIONS. REPAIR WALLS BACK TO FINISH CONDITIONS FOR PAINTING.
12. DEMOLISH ALL PROJECTOR CEILING PLATES, PROJECTORS, SMARTBOARDS AND RAPID RUN CABLES.
13. REMOVE ANY MOVABLE ITEMS SUCH AS SHELVING, FURNITURE , ETC. THAT HAS NOT BEEN REMOVED BY THE OWNER COORDINATE WITH OWNER.
14. PROVIDE TEMPORARY WEATHERPROOFING FOR THE DEMOLISHED PORTIONS OF THE BUILDING AND ROOF; REFER TO THE ROOF DEMOLITION PLAN FOR APPLICABLE NOTES.
15. ALL WALL SURFACES AFFECTED BY DEMO OR NEW WORK MUST BE REPAIRED FOR FINAL FINISH SURFACE RE- SPECIFICATION SECTION 092900 FOR TEXTURE REQUIREMENTS AT PAINTED GYP. BD. WALLS
16. REMOVE ALL PROJECTION SCREENS, ROLL-UP WALL MOUNTED MAPS AND PULL DOWNS.
17. REMOVE ALL CABLING EXCEPT SECURITY CAMERA CABLING. CABLING TO BE REMOVED PER CONSTRUCTION PHASING DO NOT LEAVE UNUSED CABLING.
18. ANY INTERRUPTION IN SERVICES MUST BE COORDINATED WITH OWNER PRIOR TO SHUT OFF.
19. REPAIR WALLS TO LIKE NEW CONDITION AT ANY REMOVED SURFACE APPLIED PRODUCTS. REMOVE ANY ADHESIVE OR INCONSISTENT TEXTURE FROM WALL. REPAIR MASONRY JOINTS
20. PROVIDE SUPPORT FOR ANY EXISTING WALLS OR DEMOLISHED PORTIONS OF WALLS FROM THE EXISTING BUILDING UNTIL NEW CONSTRUCTION IS PROPERLY TIED IN.
21. PROTECT ALL WALL HUNG POCKET STORAGE UNITS

DEMOLITION KEYED NOTES

#	Description
0	REMOVE WALL PLAQUES AND RETURN TO OWNER
1	DEMO EXISTING CARPET AND BASE; PREP FLOOR FOR NEW INSTALLATION
2	REMOVE EXISTING ACOUSTIC WALL PANELS FOR PAINTING WORK AND WALL REMOVAL;SAVE FOR RE-INSTALLATION
3	PROTECT EXISTING WALL-MOUNTED DISPLAY CASE AND MIRROR FROM EXTERIOR WALL DEMOLITION
4	DEMO EXISTING STORAGE
5	DEMO A PORTION OF THE EXISTING WALL AS REQUIRED TO MATCH THE DECK; RE-DEMO ELEVATION
6	REMOVE AND REINSTALL EXISTING COILING DOOR ON NEW EXTERIOR WALL
7	DEMO MASONRY WALL WITH MASONRY/STEEL LINTEL, PARAPET CAP, AND ASSOCIATED WALL COMPONENTS
8	DEMO EXISTING RAMP AND RAILINGS
9	REMOVE EXISTING SECURITY CAMERA AND STORE FOR RE-INSTALLATION
10	REMOVE EXISITNG EXIT SIGN AND RE-INSTALL ON NEW ON EXTERIOR WALL; RE-SPECIALTY PLAN
11	REMOVE EXISTING DOOR AND FRAME AND STORE FOR RE-INSTALLATION
12	REMOVE AND RELOCATE SPEAKERS TO OPPOSITE WALL; RE-AV
13	REMOVE AND REINSTALL WALL-MOUNTED TV AND EQUIPMENT
14	DEMO EXISTING INTERCOM SPEAKER; RE-RCP DEMO PLAN
15	PROTECT DOOR HOLD-OPEN HARDWARE MOUNTED ON EXISTING WALL FROM EXTERIOR WALL DEMOLITION.
16	DEMO EXISTING STAIRS AND RAILING ; PROTECT AND SUPPORT EXISTING LANDING, LOADING DOCK TO REMAIN
17	RELOCATE INSTRUMENT STORAGE TO ROOM L119 INSTRUMENT STORAGE ; RE-A5/A2.3
18	REMOVE AND RE-INSTALL EXISTING ALUMINUM CANOPIES + DOWNSPOUT
19	EXISTING GUARDRAIL TO REMAIN. CONNECT TO NEW GUARDRAIL
20	DEMO SIDEWALK AND PREP FOR NEW
21	REMOVE EXISTING WATER AND ELECTRICAL OUTLET AT EXTERIOR WALL; RE-MEP
22	REMOVE EXISTING DRYER OUTLET AT EXTERIOR WALL AND PATCH OPENING
23	REMOVE EXISTING SIGNAGE AND SAVE FOR RE-INSTALL AFTER NEW WORK
24	DEMO EXISTING PORTION OF WALL FOR NEW DOOR INSTALLATION
25	DEMOLISH PORTION OF CONCRETE SIDEWALK AND PREP AREA FOR NEW INSTALLATION
26	REMOVE WALL MOUNTED OUTDOOR SPEAKER ON EXTERIOR WALL; RE-ELEC
27	REMOVE AND REINSTALL WALL-MOUNTED OUTDOOR SECURITY CAMERA ON THE EXTERIOR WALL; PATCH WALL AND BRICK VENEER AFTER DEMO; RE-DEMO ELEVATION
28	DEMO EXISTING 2'×4' LIGHT FIXTURES FROM CLASSROOM AND REINSTALL IN NEW CORRIDOR; RE-A2/A2.0A; RE-ELEC
29	DEMO EXISTING BOLLARD
30	EXISTING BOULDERS TO REMAIN
31	DEMO EXISTING CEILING IN THE CORRIDOR TO THE EXTENTS SHOWN IN THE RCP DEMOLITION PLAN, SAVE LIGHTS FOR RE-INSTALL
32	DEMOLISH EXTERIOR WALL MATERIALS TO CMU WALL IN PREPARATION OF NEW WORK. EXISTING FLUID APPLIED WEATHER BARRIER TO REMAIN ANY INCONSISTENCIES TO ENSURE LEVEL SUBSTRETE FOR HAT CHANNEL INSTALLATION
33	DEMO EXISTING EDGE CEILING GRID AND PREP FOR NEW GRID INSTALLATION
34	REMOVE PYRAMIDAL DIFFUSERS AT LAST GRID OF WALL AND REINSTALL AFTER NEW CEILING GRID IS CONNECTED TO EXISTING GRID

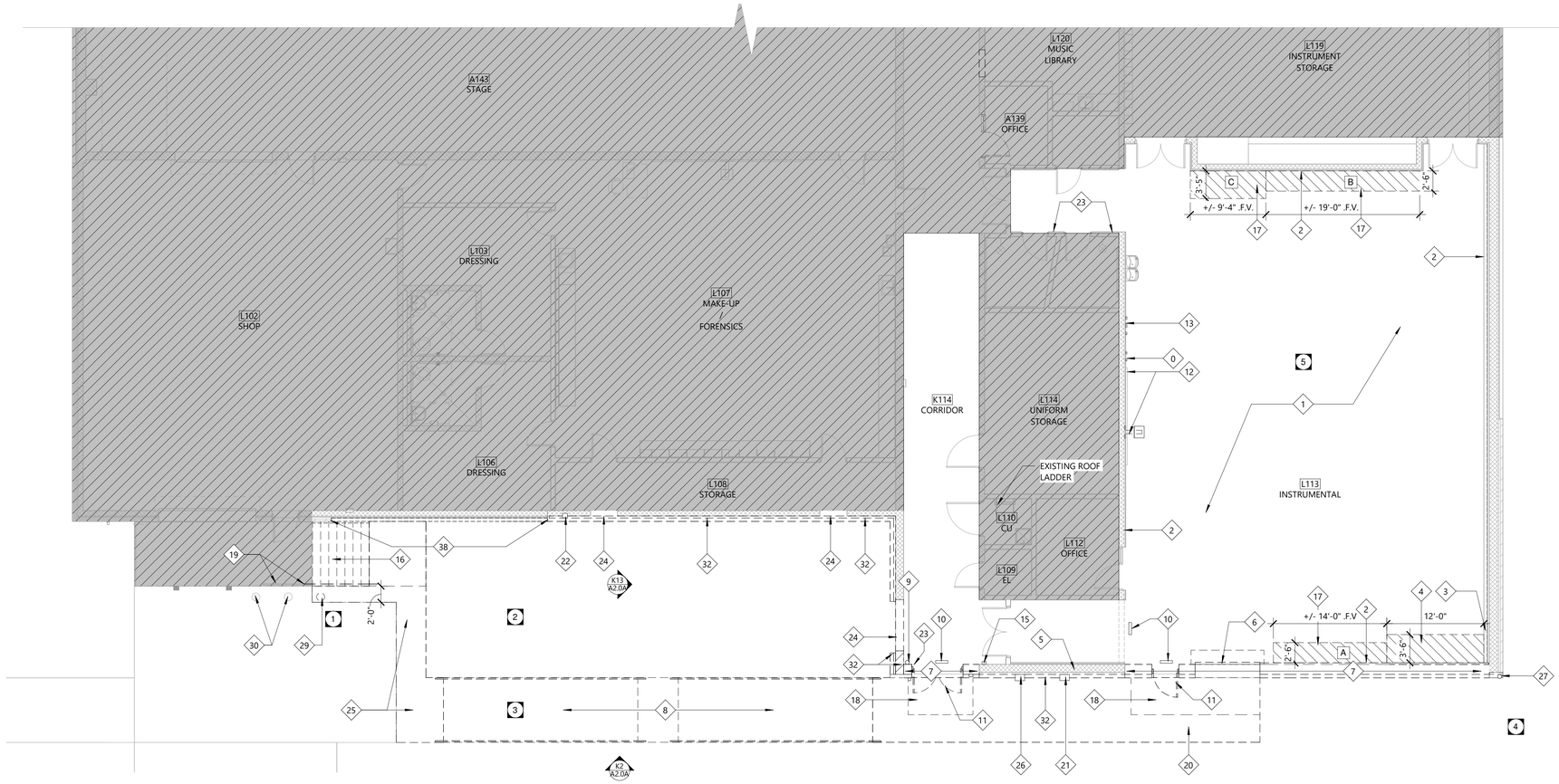

A5 First Floor Demolition Plan
1/8" = 1'-0"

HIGHT JACKSON ASSOCIATES, P.A
REGISTERED ARCHITECTS
Certificate C 349
ARKANSAS

REGISTERED ARCHITECT
TIMOTHY L. SCHMIDT
LICENSE NO. 9405
STATE OF ARKANSAS

HightJackson ASSOCIATES
5201 W Village Parkway, Suite 300 | Rogers, Arkansas 72758 | (479) 464-4965 | www.hjarch.com

An Addition for BWHS
BWHS Band Addition
1351 Gamble Rd, Centerton, AR 72719

DRAWN BY. MS
CHECK BY. TS
ISSUE DATE 04/06/2026
PROJECT NO. 2421
REVISION DATES

DEMOLITION PLAN

S H E E T
A2.0

COPYRIGHT 2026
THESE DRAWINGS AND SPECIFICATIONS ARE THE EXCLUSIVE PROPERTY OF HIGHT JACKSON ASSOCIATES, PA. USE OR REPRODUCTION IS PROHIBITED WITHOUT WRITTEN CONSENT

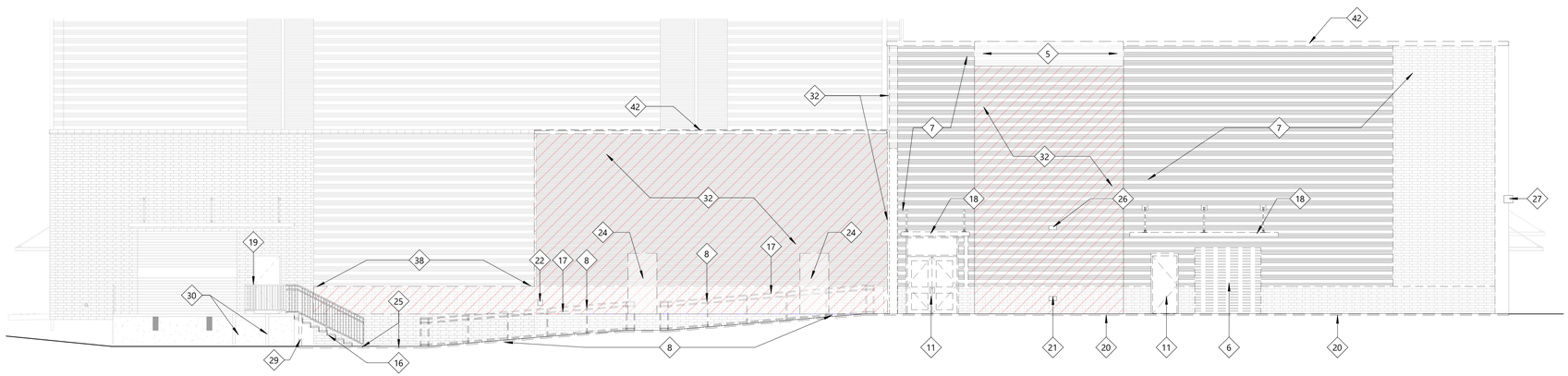

K2 Demo South Elevation
1/8" = 1'-0"
Ref: A5/ A2.0

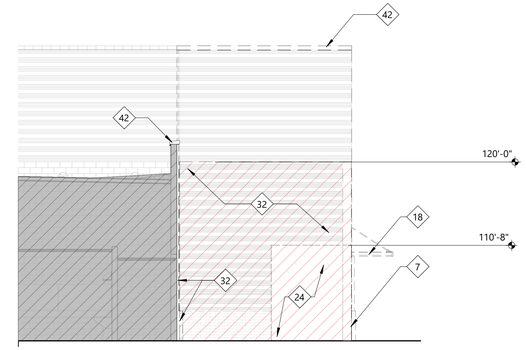

K13 Demo West Elevation
1/8" = 1'-0"
Ref: A5/ A2.0

1 Loading Dock Demo

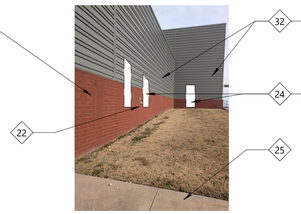

2 Exterior Storage wall Demo

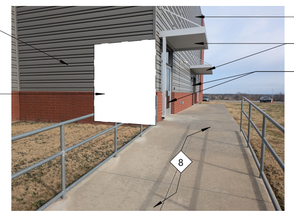

3 Ramp and Band Room Exterior Wall Demo

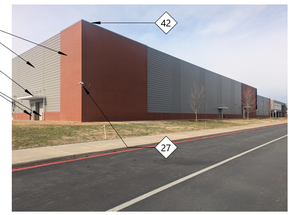

4 Existing South Wall Demo

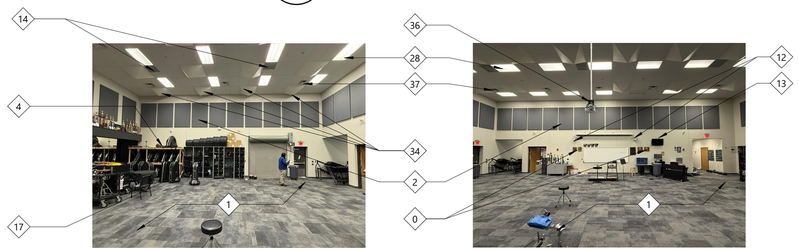

5 Existing Band Classroom interior East, South and West Elevation Demo

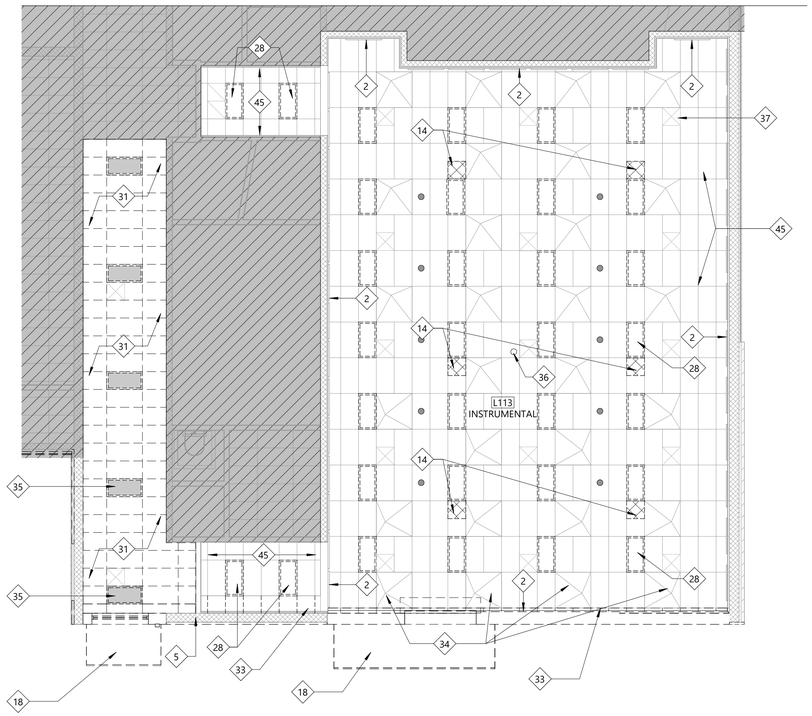

A2 RCP Demo Plan
1/8" = 1'-0"

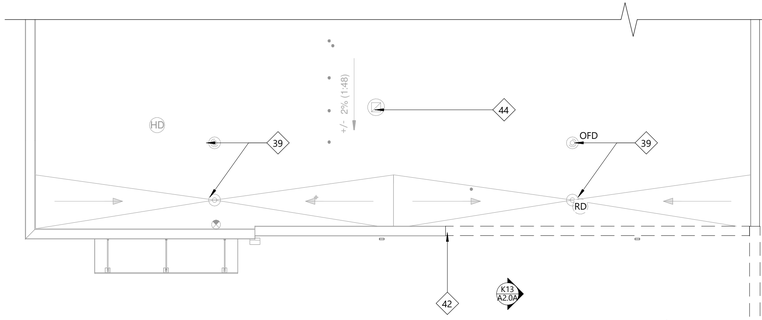

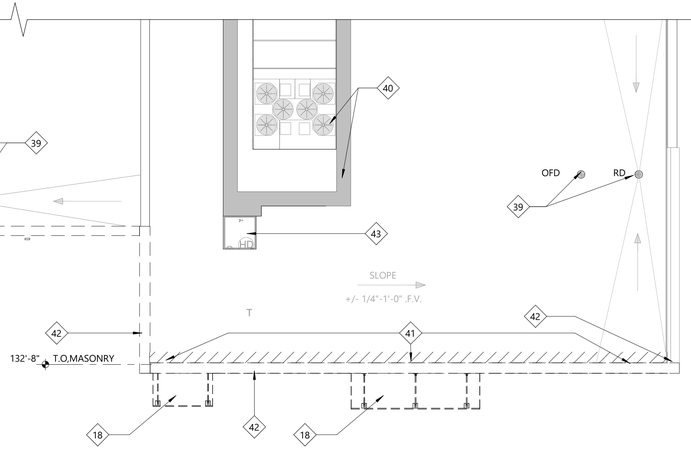

C7 Roof Demo Plan
1" = 10'-0"

RCP Demo Legend
EXISTING 2'x4' ACOUSTICAL CEILING
DEMO EXISTING GRID
DEMO EXISTING 2 X 4 LIGHT FIXTURE AND RE-INSTALL AS REQUIRED IN NEW CORRIDOR , RE-ELEC
EXISTING 2 X 4 LIGHT FIXTURE, RE-ELEC
PICTURE REFERENCE, RE - A2.01
DEMO EXISTING 2 X 4 LIGHT FIXTURE, AND REINSTALL RE-ELEC
DEMO EXISTING SPEAKERS; RE-ELEC
EXISTING MICROPHONE; TO REMAIN; RE-AV

RCP Demo General Notes:

1. VERIFY ALL DEMOLITION ITEMS AND EXTENTS BEFORE REMOVAL.
2. PROTECT EXISTING CEILINGS, DIFFUSERS, PROJECTORS, HANGER RODS, AND OTHER FIXTURES NOTED TO REMAIN.
3. REMOVE DEMOLITION ITEMS CAREFULLY TO AVOID DAMAGE TO ADJACENT CONSTRUCTION OR FINISHES.
4. ITEMS DESIGNATED FOR REINSTALLATION, INCLUDING LIGHT FIXTURES AND DIFFUSERS, TO BE REINSTALLED AS DIRECTED.
5. PREP SUBSTRATES, CEILING GRIDS, AND OPENINGS FOR NEW INSTALLATIONS.
6. COORDINATE WITH ELECTRICAL, MECHANICAL, AND OTHER TRADES FOR REMOVAL, PROTECTION, AND REINSTALLATION.

DEMOLITION KEYED NOTES

#	Description
35	REMOVE AND REINSTALL EXISTING 2' X 4' LIGHT FIXTURE AND DIFFUSERS IN CORRIDOR AFTER NEW CEILING GRID IS INSTALLED
36	EXISTING PROJECTOR AND HANGER ROD FROM CEILING TO REMAIN AND BE PROTECTED
37	EXISTING DIFFUSERS TO REMAIN; RE-MECH
38	REMOVE EXISTING BRICK WAINSCOT AS SHOWN IN DEMO PLANS AND ELEVATIONS
39	PROTECT EXISTING OVERFLOW DRAIN AND ROOF DRAIN
40	EXISTING RTU TO REMAIN AND WALKPAD ON THE ROOF ; RE-MECH
41	REMOVE SECTION OF EXISTING ROOF AND INSULATION FOR INSTALL OF LAP IN METAL DECK; RE-STRUCT
42	REMOVE EXISTING PARAPET CAP TO NEAREST CONTROL OR EXPANSION JOINT, INCLUDING ASSOCIATED FASTENERS AND SEALANTS. PROTECT ADJACENT CONSTRUCTION.
43	PROTECT EXISTING ACCESS HATCH AND LADDER
44	PROTECT EXISTING EXHAUST; RE-MECH
45	EXISTING CEILING TILE AND GRID TO REMAIN

HIGHT . JACKSON . ASSOCIATES, P.A
REGISTERED ARCHITECTS
Certificate C 349
ARKANSAS

REGISTERED ARCHITECT
TIMOTHY L. SCHMIDT
LICENSE NO. 9423
STATE OF ARKANSAS

Hight Jackson ASSOCIATES
5201 W Village Parkway, Suite 300 | Rogers, Arkansas 72758 | (479) 464-4965 | www.hjarch.com

An Additon for BWHS
BWHS Band Addition
1351Gamble Rd, Centerton, AR 72719

DRAWN BY. MS
CHECK BY. TS
ISSUE DATE 04/06/2026
PROJECT NO. 2421
REVISION DATES

ROOF & RCP DEMO PLAN

S H E E T
A2.0A

COPYRIGHT 2026
THESE DRAWINGS AND SPECIFICATIONS ARE THE EXCLUSIVE PROPERTY OF HIGHT JACKSON ASSOCIATES, PA. USE OR REPRODUCTION IS PROHIBITED WITHOUT WRITTEN CONSENT.

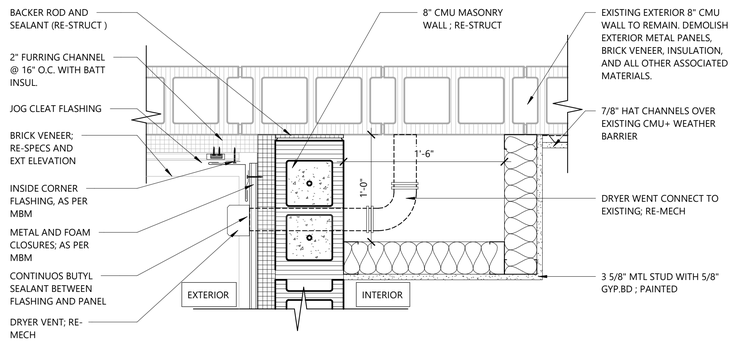

L1 Enlarged Plan Detail
1 1/2" = 1'-0" Ref: A5/ A2.1

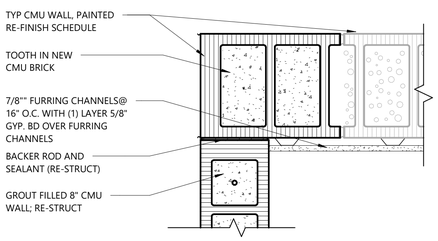

H1 Enlarged Plan Detail
1 1/2" = 1'-0" Ref: A5/ A2.1

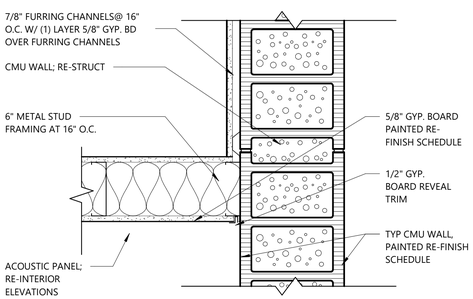

D1 Enlarged Plan Detail
1 1/2" = 1'-0" Ref: A5/ A2.1

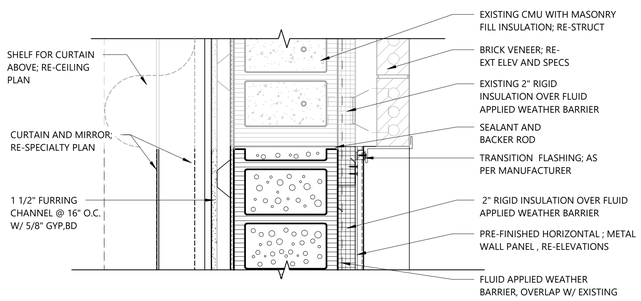

A1 Enlarged Plan Detail
1 1/2" = 1'-0" Ref: A5/ A2.1

GENERAL NOTES:

1. ALL DIMENSIONS ARE TO BE FROM FACE OF STUD OR BLOCK UNLESS NOTED OTHERWISE.
2. FURNITURE AND EQUIPMENT SHOWN DASHED ON PLANS ARE N.I.C. (NOT IN CONTRACT) U.N.O. (UNLESS NOTED OTHERWISE)
3. PROVIDE CONTROL JOINTS IN ALL MASONRY VENEER AS SHOWN ON BUILDING ELEVATIONS, PLANS AND SPECIFIED. CONTROL JOINTS SHALL NOT EXCEED 24'-0" O.C.
4. PROVIDE DEFLECTION TRACK AT ALL NON-LOAD BEARING WALLS THAT EXTEND TIGHT TO STRUCTURE OR ROOF DECK.
5. COMPLY WITH THE US DEPARTMENT OF JUSTICE ADOPTED 2010 ADA STANDARDS FOR ACCESSIBLE DESIGN AND THE STATE OF ARKANSAS ADOPTED 2009 ANSI A117.1 STANDARD FOR ACCESSIBLE AND USEABLE BUILDINGS AND FACILITIES THROUGH THE 2012 ARKANSAS FIRE PREVENTION CODE BY THE ARKANSAS STATE FIRE MARSHALL IN REGARDS TO ACCESSIBILITY OR HANDICAPPED FEATURES.
6. PROVIDE MASONRY FILL INSULATION IN ALL CMU WALLS AT EXTERIOR LOCATIONS, TYP., UNLESS OTHERWISE PROHIBITED DUE TO MASONRY WALL REINFORCING.

METAL STUD GAUGES

UNLESS NOTED OTHERWISE, MINIMUM STUD GAUGE SHALL BE AS FOLLOWS--- (LENGTH INDICATED IS FOR UNBRACED LENGTH)

STUD FRAMING FOR CEILING SUPPORT, FURRING, STUD BRACING, ETC.

- 3 5/8" AND 6" STUD JOIST-- 20 GAUGE CSJ AT 16" ON CENTER.
- STUD BRACING-- 20 GAUGE CSJ STUD.

INTERIOR STUD WALLS

- 6" WALLS TO 24'-0" HIGH- 20 GAUGE DRYWALL STUD AT 16" O.C.
- 6" WALLS FROM 24'-0" TO 26'-0" HIGH- 20 GAUGE CSJ STUD AT 16" O.C.
- 6" WALLS FROM 26'-0" TO 30'-0" HIGH - 16 GAUGE CSJ STUD AT 16" O.C.
- 3-5/8" WALLS TO 13'-0" HIGH - 25 GAUGE DRYWALL STUD AT 16" O.C.
- 3-5/8" WALLS FROM 13'-0" TO 16'-0" HIGH - 20 GAUGE CSJ STUD AT 16" O.C.

SYMBOL LEGEND

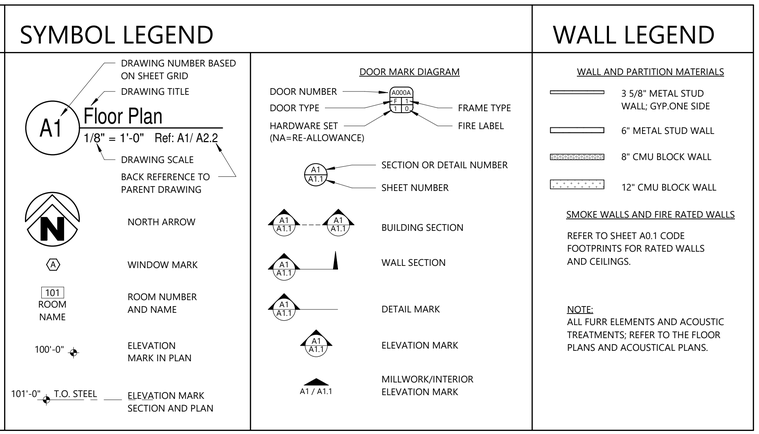

WALL LEGEND

WALL AND PARTITION MATERIALS

- 3 5/8" METAL STUD WALL; GYP.ONE SIDE
- 6" METAL STUD WALL
- 8" CMU BLOCK WALL
- 12" CMU BLOCK WALL

SMOKE WALLS AND FIRE RATED WALLS

REFER TO SHEET A0.1 CODE FOOTPRINTS FOR RATED WALLS AND CEILINGS.

NOTE:
ALL FURR ELEMENTS AND ACOUSTIC TREATMENTS; REFER TO THE FLOOR PLANS AND ACOUSTICAL PLANS.

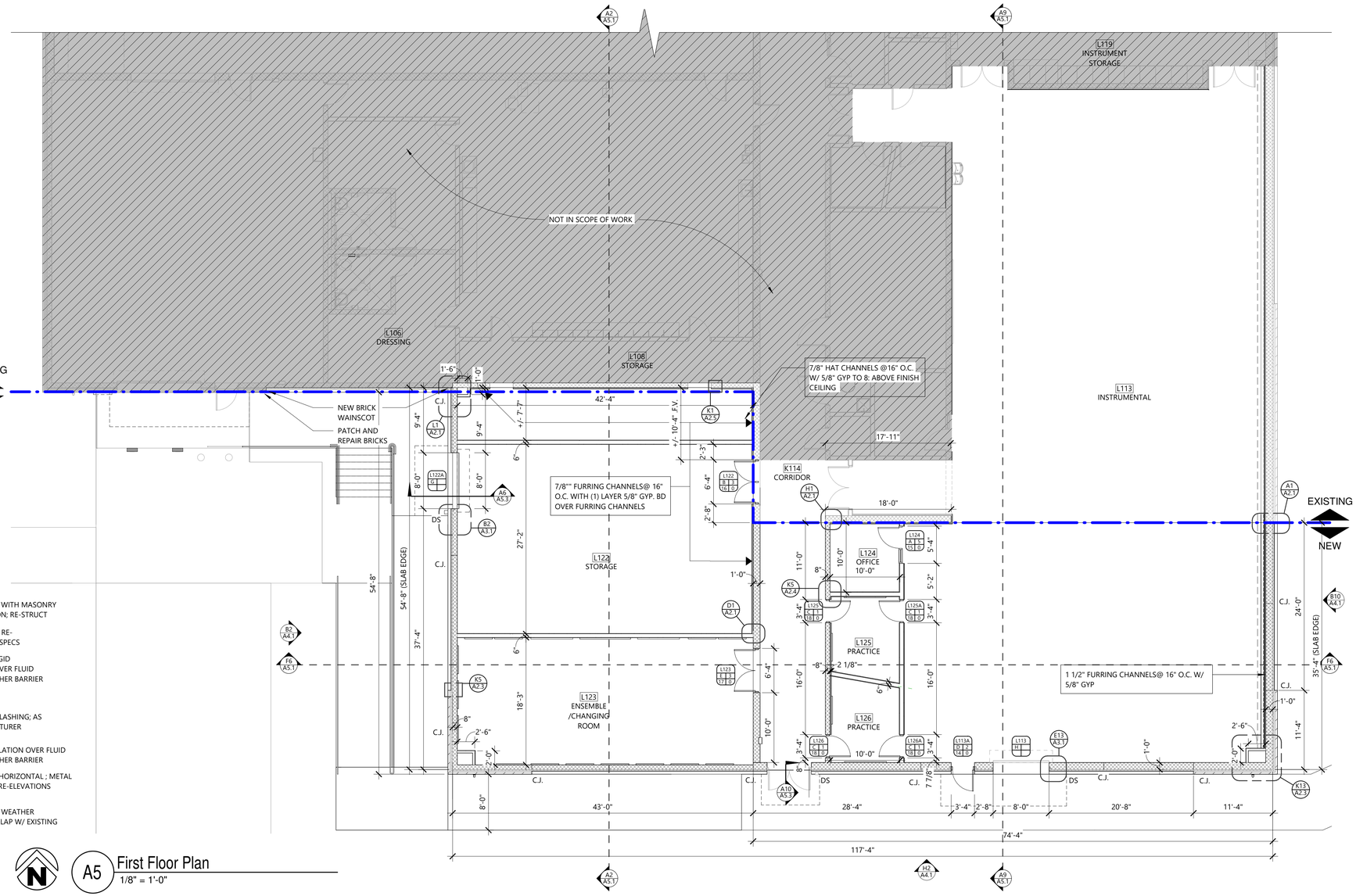

A5 First Floor Plan
1/8" = 1'-0"

HIGHT JACKSON ASSOCIATES, P.A
REGISTERED ARCHITECTS
Certificate C 349
ARKANSAS

REGISTERED ARCHITECT
TIMOTHY L. SCHMIDT
LICENSE NO. 9405
STATE OF ARKANSAS

Hight Jackson ASSOCIATES
5201 W Village Parkway, Suite 300 | Rogers, Arkansas 72758 | (479) 464-4965 | www.hjarch.com

An Addition for BWHS
BWHS Band Addition
1351 Gamble Rd, Centerton, AR 72719

DRAWN BY. MS
CHECK BY. TS
ISSUE DATE 04/06/2026
PROJECT NO. 2421
REVISION DATES

FIRST FLOOR PLAN
SHEET
A2.1

COPYRIGHT 2026
THESE DRAWINGS AND SPECIFICATIONS ARE THE EXCLUSIVE PROPERTY OF HIGHT JACKSON ASSOCIATES,PA. USE OR REPRODUCTION IS PROHIBITED WITHOUT WRITTEN CONSENT.

SIGN SHALL BE MOUNTED ON THE WALL ADJACENT TO LATCH SIDE OF DOOR. WHERE THERE IS NO WALL SPACE TO THE LATCH SIDE OF THE DOOR, SIGNS SHALL BE PLACED ON THE NEAREST ADJACENT WALL. MOUNTING HEIGHT SHALL BE 60" A.F.F. TO THE TOP OF SIGN. MOUNTING LOCATION FOR SIGN SHALL BE SO THAT A PERSON MAY APPROACH WITHIN 3" OF SIGNAGE WITHOUT ENCOUNTERING PROTRUDING OBJECTS OR STANDING WITHIN THE SWING OF A DOOR.

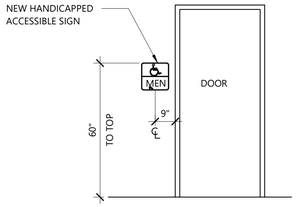

H5 Room Signage Detail
3/8" = 1'-0"

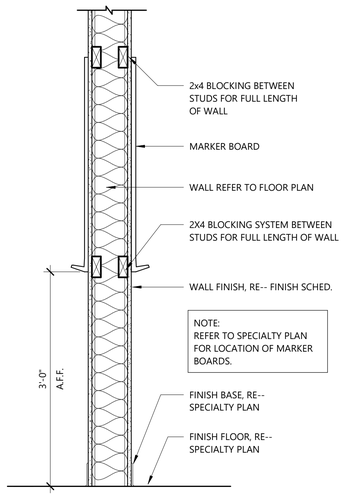

C5 A2.3 - Markerboard Detail
1" = 1'-0"

Specialty Plan Legend

TV	INTERACTIVE FLAT PANEL TV BY OWNER
EX-TV	EXISTING TV , RE-INSTALLED. F.V.
FEC	FIRE EXTINGUISHER CABINET, ALL FEC LOCATIONS TO BE NEW U.N.O
FEB-WC	FIRE EXTINGUISHER BRACKET- WET CHEMICAL
6MB	6' MARKER BOARD; BOTTOM AT 3'-0" AFF
CG	CORNER GUARD
1	SIGN TYPE, RE- ROOM SIGNAGE SCHEDULE
EX-MB	EXISTING MARKER BOARD; 16' MARKER BOARD, BOTTOM AT 3'-0" AFF
PT-1	ACCENT PAINT, RE- FINISH LEGEND AND GENERAL FINISH NOTE #25
X-TS	TACK STRIP - NUMBER REPRESENTS THE LINEAR FEET OF TACK STRIP. I.E: 12-TS = 12' OF TACK STRIP. ALL TACK STRIP LOCATIONS TO HAVE 2 ROWS OF TACK STRIPS. ONE STRIP AT 4'-O" AFF, ONE STRIP AT 5'-6" AFF
EX-MM	EXISTING MIRROR; 4'-0" X 8'-0" SET ON TOP OF THE BASE ; RE-A7.1
MM	4'-0" X 8'-0" MIRROR SET ON TOP OF THE BASE ; RE-A7.1
MM - 2	1'-6" X 8'-0" MIRROR SET ON TOP OF THE BASE ; RE-A7.1
TS	TRANSITION STRIP

Storage Relocation Schedule

#	EXISTING STORAGE ; RE-DEMO PLAN FOR EXISTING LOCATION
1	SOUTH WALL STORAGE
2	NORTH WALL STORAGE
3	NORTH WALL STORAGE : 2

Sign Design Types

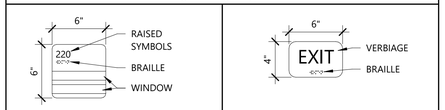

TYPE 1 TYPE 2

General Signage Notes

1. ALL INTERIOR SIGNAGE IS TO BE MOUNTED AT 60' AFF TO TOP SIGN. SEE A9/A2.3 FOR ROOM SIGNAGE DETAIL
2. FONT AND NUMERAL SIZE TO MATCH EXISTING SIGNS.
3. COLOR TO MATCH EXISTING SIGNS.
4. ALL SIGNS TO BE ADA COMPLIANT.
5. DESIGN INDICATED IS BASED ON SIGNSCAPE ARCHITECTURAL SIGNAGE BY INPRO CORPORATION, PHOTOPOLYMER SERIES ASPEN 1 . ROOM NUMBERS WILL BE DETERMINED AT TIME OF SUBMITTAL.

Room SIGNAGE Schedule

#	ROOM NAME	DESIGN
1	CLASSROOM	TYPE 1
2	OFFICE	TYPE 1
3	STORAGE	TYPE 1
4	EXIT	TYPE 2
EX	EXISTING SIGN TO BE REINSTALLED	.F.V.

Finish Legend

BASE		
RB	RUBBER BASE	JOHNSONITE #20 CHARCOL
CEILING		
AC-1	2' X 4' ACOUSTICAL CEILING TILE	WHITE SUSPENDED ACOUSTICAL CEILING
FLOORS		
CPT-1	CARPET	INTERFACE, EXPOSED, WATER MILL
PC	POLISHED CONCRETE	--
SC	SEALED CONCRETE	--
MILLWORK		
PL-1	PLASTIC LAMINATE	PIONITE, SUEDE, SABLE AG021
OTHER		
AWP-1	ACOUSTIC WALL PANEL	FABRIC COLOR GUILFORD OF MAINE 298 MEDIUM GRAY
DOORS	WOOD DOORS	PLAIN SLICED WHITE BIRCH, WHEAT FINISH
EX-AWP-1	ACOUSTIC WALL PANEL	EXISTNG SOUTH WALL ACOSUTIC PANEL; RE-INSTALLED
WALLS		
EP-X	EPOXY PAINT	"X" REPRESENTS PAINT NUMBER FROM THE PT WALL COLOR LISTED BELOW
PT-1	PAINT	SW7051 ANALYTICAL GRAY
PT-3	PAINT	SW7050 USEFUL GRAY

General Finish Notes

1. PROVIDE 1 LAYER 5/8" TYPE X GYPSUM BOARD AT METAL STUD WALLS, UNLESS OTHERWISE NOTED IN DRAWINGS.
2. REFER TO DRAWINGS FOR LOCATIONS OF ACOUSTICAL TREATMENTS (REFLECTED CEILING PLANS AND INTERIOR ELEVATIONS)
3. PROVIDE ZINC TERMINATION STRIP WHERE EPOXY FLOOR FINISH TRANSITIONS TO ANOTHER FLOOR MATERIAL.
4. REFER TO REFLECTED CEILING PLANS FOR ALL CEILING HEIGHTS AND METAL STUD WITH GYPSUM BOARD HEADWALLS AND FURR DOWN LOCATIONS.
5. UNLESS NOTED OTHERWISE, PAINT WALLS WITHOUT CEILINGS FULL HEIGHT TO UNDERSIDE OF DECK.
6. PROVIDE 6" THICK UNFACED BATT INSULATION IN WALLS SEPARATING MUSIC ROOM, INSTRUMENT ROOM, OFFICES, PRACTICE AND ENSEMBLE/CHANGING ROOM FROM OTHER AREAS.
7. PROVIDE A 48" WIDE STRIP OF 6" THICK UNFACED BATT INSULATION ABOVE ALL CEILINGS ON BOTH SIDES OF WALL SEPARATING MUSIC ROOM, PRACTICE, INSTRUMENT ROOM, OFFICES, AND ENSEMBLE/CHANGING ROOM FROM OTHER AREAS.
8. REFER TO CODE FOOTPRINT FOR FIRE SEPARATION WALLS.
9. PROVIDE OUTSIDE CORNER GUARDS AS SPECIFIED ON ALL GYPSUM BOARD OUTSIDE CORNERS UNLESS NOTED OTHERWISE.
10. UNLESS NOTED OR SHOWN ON DRAWINGS OTHERWISE, TERMINATE ALL NON-BEARING, NON-RATED PARTITIONS A MINIMUM 6" TO 8" ABOVE HIGHEST ADJACENT CEILINGS.
11. REFER TO REFLECTED CEILING PLANS FOR WALLS THAT MUST EXTEND TO DECK.
12. PROVIDE SOLID WOOD BLOCKING IN WALLS FOR MOUNTING MARKER BOARDS, TACK BOARDS, TACK STRIPS, TV BRACKETS, SMART BOARDS, LECTURES UNIT AND TOILET ACCESSORIES.
13. ALL WALLS TIGHT TO DECK AT PLENUM SPACES TO BE SEALED AIR TIGHT. COORDINATE LOCATIONS WITH MECHANICAL.
14. PROVIDE TRANSITION STRIP AS SPECIFIED WHERE CARPET TRANSITIONS TO A DIFFERENT FLOOR MATERIAL.
15. REFER TO ELECTRICAL DRAWINGS FOR ALL ELECTRICAL OUTLETS AND SWITCH LOCATIONS. COORDINATE ALL ELECTRICAL OUTLETS AND SWITCHES WITH MILLWORK.
16. ACCENT PAINT MARKER INDICATES SURFACE TO BE PAINTED THE ACCENT COLOR. STOP ACCENT PAINT COLOR AT THE END OF WALL OR INTERSECTION OF ADJACENT WALL.
17. FLOOR MATERIAL TRANSITIONS AT DOOR WAYS SHALL HAPPEN BELOW DOOR LEAF IN CLOSED POSITION. FLOOR PATTERN PLANS ARE TO SHOW MATERIAL COLOR AND LAYOUT ONLY.
18. AT WALLS WITH INSULATION THAT ONLY HAVE GYPSUM BOARD ON ONE SIDE OF THE WALL PROVIDE METAL STRAPPING TO SECURE THE INSULATION IN PLACE.
19. REFER TO SPECIALTY PLANS FOR DETAILED FINISH INFORMATION, COLORS, & ACCENT WALLS NOT FOUND IN FINISH SCHEDULE.
20. ALL EXPOSED STEEL PIPE RAIL, STEEL STAIR COMPONENTS, ETC., EXPOSED TO VIEW ARE TO RECEIVE PAINT.
21. PROVIDE CLEAR CONCRETE SEALER AT ALL EXPOSED CONCRETE FLOORS AND CONCRETE STEPS.
22. IN ROOMS SHOWN TO TAPE AND FLOAT GYPSUM BOARD OR NOT TO PAINT CMU, WALLS ARE TO BE CLEANED OF ANY MARKING OR DIRT. ALL GYPSUM BOARD IS TO BE REPAIRED IF DAMAGED.
23. ALL HOLLOW METAL DOORS AND FRAMES TO BE PAINTED, INTERIOR AND EXTERIOR.
24. AT FRY REGLET REVEAL FILL GAP CREATED BEHIND FLOOR BASE WITH FILLER AND SEALANT TO TOP OF BASE TO MATCH BASE COLOR.
25. DO NOT PAINT FRY REGLET REVEALS.
26. AT FIRE RATED WALLS WHERE FIRE CAULK WILL BE EXPOSED, BACKSET FIRE CAULK AND CAULK OVER WITH COLOR MATCH CAULK.

General Sound Isolation Notes:

1. MINIMIZE PENETRATIONS SUCH AS (BUT NOT LIMITED TO) DUCTWORK, PIPING, PLENUM GRILLES, ETC. OF WALLS RECOMMENDED AT STC 50 OR GREATER.
2. ANY WALL RECOMMENDED AT STC 45 OR HIGHER MUST SEAL ALL PENETRATIONS WITH NON-HARDENING SEALANT. IF PENETRATION IS TOO LARGE TO SEAL WITH SEALANT, PENETRATION MUST BE FILLED WITH BATT INSULATION AND SEALED.
3. BACKBOXES, RECEPTACLES, AND OTHERSIMILAR EQUIPMENT MUST NOT SHARE STUD CAVITY SPACE WITH ADJACENT ROOM IN WALLS RECOMMENDED AT STC 45 OR GREATER.
4. BACKBOXES, RECEPTACLES, AND OTHER SIMILAR EQUIPMENT MUST BE WRAPPED WITH ACOUSTIC PUTTY IN WALLS RECOMMENDED AT STC 45 OR GREATER.
5. THE OUTER MOST LAYERS OF GYPSUM BOARD MUST BE SEALED WITH A BEAD OF NON-HARDENING SEALANT TO THE FLOOR STRUCTURE.
6. ANY WALL RECOMMENDED AT STC 45 OR HIGHER MUST BE SEALED ALONG THE PERIMETER, AND AT JUNCTIONS, WITH NON-HARDENING ACOUSTIC CAULK.
7. WALLS RECOMMENDED AT STC 45 OR HIGHER MUST BE BUILT TO DECK THE WALL MUST ALLOW SPACE TO SEAL THE WALL TO THE DECK WITH NON-HARDENING SEALANT (1/4" SPACING IS RECOMMENDED BETWEEN WALL MATERIAL AND DECK FOR SEALANT).

Keyed Finish Notes (KN-1)

1. PROVIDE 6" SOUND BATT INSULATION ABOVE ENTIRE CEILING
2. PROVIDE PL-1 AT CURTAIN PANEL, AS MENTIONED IN ENLARGED DETAIL
3. PROVIDE 4'-0" X 6'-0" ACOUSTIC PANELS ON EACH CLASSROOMS WALL, RE-INTERIOR ELEVATIONS FOR MOUNTING HEIGHTS AND DETAILED PANEL SIZES.

HIGHT JACKSON ASSOCIATES, P.A. REGISTERED ARCHITECTS Certificate C 349 ARKANSAS

REGISTERED ARCHITECT TIMOTHY L. SCHMIDT LICENSE NO. 9405 STATE OF ARKANSAS

Hight Jackson ASSOCIATES
5201 W Village Parkway, Suite 300 | Rogers, Arkansas 72758 | (479) 464-4965 | www.hjarch.com

An Addition for BWHS
BWHS Band Addition
1351 Gamble Rd, Centerton, AR 72719

DRAWN BY. MS
CHECK BY. TS
ISSUE DATE 04/06/2026
PROJECT NO. 2421
REVISION DATES

FINISH SCHEDULE / NOTES

S H E E T
A2.2

COPYRIGHT 2026
THESE DRAWINGS AND SPECIFICATIONS ARE THE EXCLUSIVE PROPERTY OF HIGHT JACKSON ASSOCIATES PA. USE OR REPRODUCTION IS PROHIBITED WITHOUT WRITTEN CONSENT

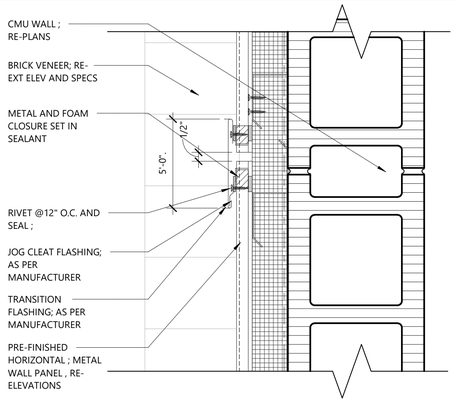

K1 Enlarged Plan Detail
3" = 1'-0" Ref: E2/ A1.1

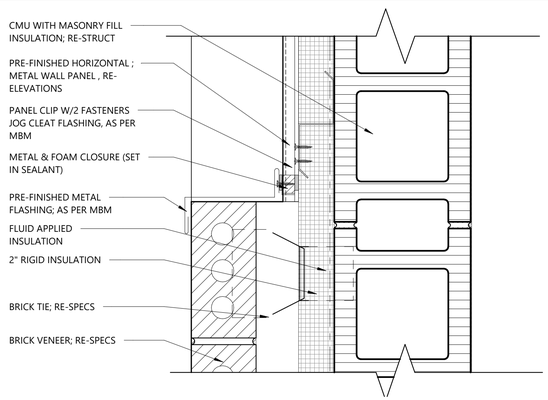

K5 Enlarged Plan Detail
3" = 1'-0" Ref: A5/ A2.1

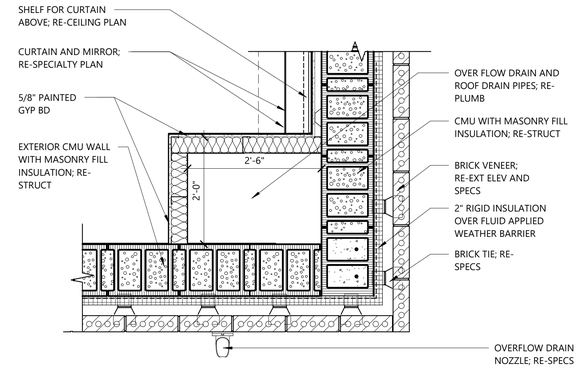

K13 Enlarged Plan Detail
3/4" = 1'-0" Ref: A5/ A2.1

Acoustics Legend

———	STC-60 RATED WALL; (MEDIUM LOUD MUSIC HEARD FAINTLY)
- - - -	STC1-65 RATED WALL; (LOUD MUSIC HEARD FAINTLY)

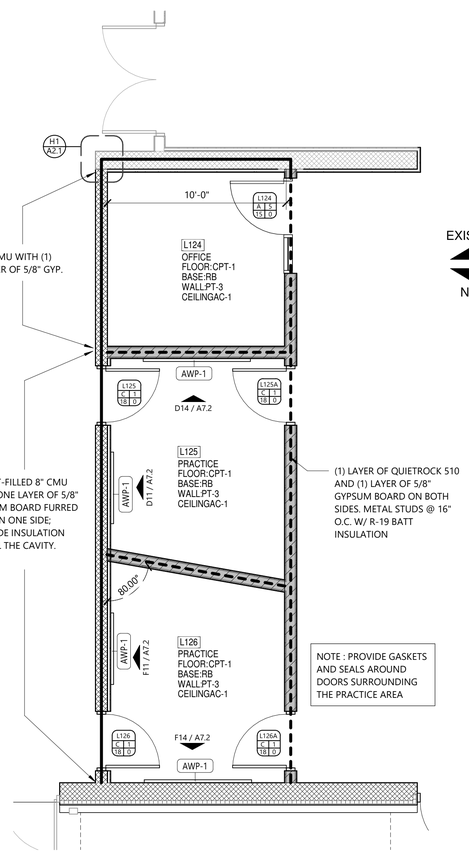

A1 Enlarged Sound Isolation Plan
1/4" = 1'-0" Ref: A5/ A2.3

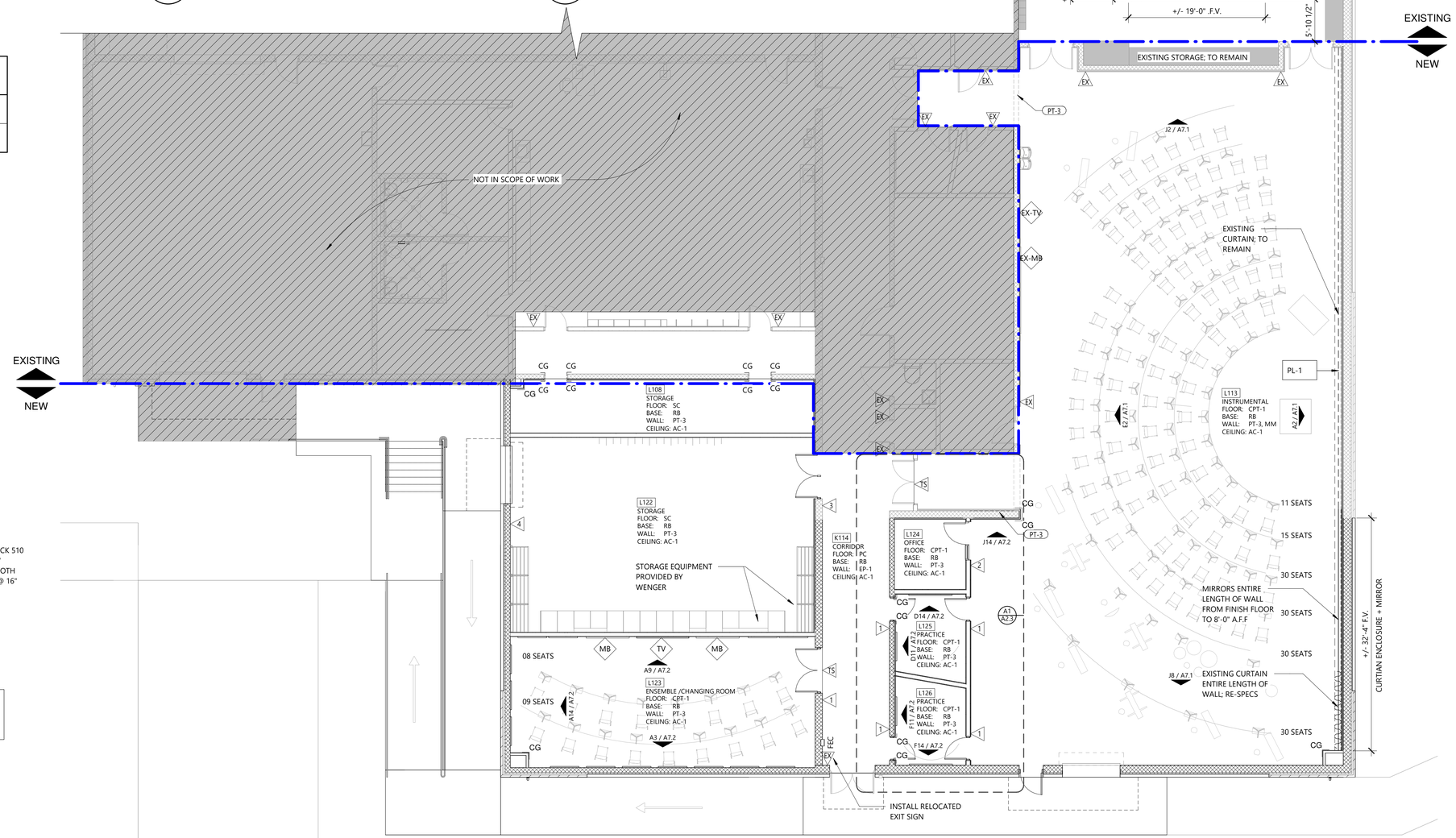

A5 First Floor Specialty Plan
1/8" = 1'-0"

HIGHT JACKSON ASSOCIATES, P.A. REGISTERED ARCHITECTS Certificate C 349 ARKANSAS

REGISTERED ARCHITECT TIMOTHY L. SCHMIDT LICENSE NO. 9405 STATE OF ARKANSAS

Hight Jackson ASSOCIATES
5201 W Village Parkway, Suite 300 | Rogers, Arkansas 72758 | (479) 464-4965 | www.hjarch.com

An Addition for BWHS
BWHS Band Addition
1351Gamble Rd, Centerton, AR 72719

DRAWN BY. MS
CHECK BY. TS
ISSUE DATE 04/06/2026
PROJECT NO. 2421
REVISION DATES

SPECIALTY PLAN

SHEET A2.3

COPYRIGHT 2026
THESE DRAWINGS AND SPECIFICATIONS ARE THE EXCLUSIVE PROPERTY OF HIGHT JACKSON ASSOCIATES, PA. USE OR REPRODUCTION IS PROHIBITED WITHOUT WRITTEN CONSENT.

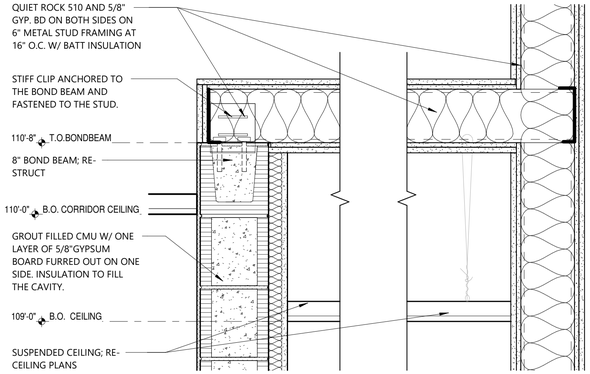

K1 Enlarged Detail

1 1/2" = 1'-0" Ref: F6/ A5.1

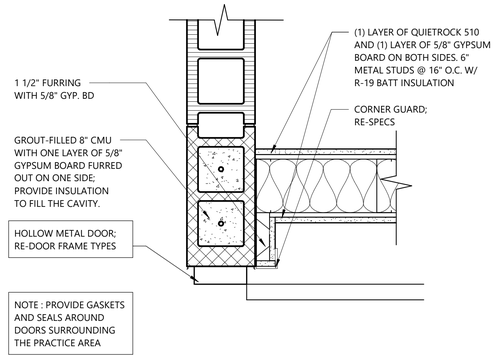

K5 Detail 10

1 1/2" = 1'-0" Ref: A5/ A2.1

Reflected Ceiling Plan Legend

- 0'-0" CEILING HEIGHT FROM FINISHED FLOOR
- 2'x4' ACOUSTICAL CEILING
- EXISTING 2'x4' ACOUSTICAL CEILING
- 2'x4' ACOUSTICAL PANEL; INFILL FROM REMOVED LIGHT AND SPEAKERS . RELOCATE EXISTING TILES FROM THE SOUTH SIDE OF ROOM TO THE NORTH END AS NEEDED TO CREATE CONSISTENT LOOK
- METAL STUD AND ACOUSTICAL DRYWALL CEILING AT TOP OF CMU
- NEW CEILING GRID WITH RE-INSTALLED EXISTING CEILING TILES
- EXISTING PYRAMIDAL CEILING DIFFUSER, TO REMAIN
- PYRAMIDAL CEILING DIFFUSER, RE-SPECS
- MICROPHONE ; RE-AV
- EXISTING MICROPHONE ; TO REMAIN
- WALLS TO EXTEND TIGHT TO DECK. RE-GENERAL NOTES
- EXISTING WALLS TO DECK
- INTERCOM SPEAKER - PROVIDE 2X2 CEILING GRID AT ACOUSTICAL LAYIN CEILING. PROVIDE 1X2 FRAMED OPENING TO ACCEPT INTERCOM SPEAKER . COORDINATE LOCATION W/AV DRAWINGS PRIOR TO INSTALLATION

Reflected Ceiling Plan General Notes:

1. WALLS TO DECK AT PLENUM LOCATIONS-EXTEND TIGHT TO STRUCTURE AND SEAL AIR TIGHT AT FIRE RATED WALLS (RE - CODE FOOTPRINT FOR LOCATIONS/ EXTEND TIGHT TO DECK AND FIRE CAULK AT ALL OTHER LOCATIONS EXPOSED TO VIEW EXTEND TIGHT TO DECK AND TRIM TO CREATE CLEAN VISUAL APPEARANCE.
2. AT CMU WALLS PERPENDICULAR TO THE JOIST STRUCTURE ABOVE, THE TOP OF CMU WALL IS TO STOP AT MASONRY COURSING CLOSEST TO THE BOTTOM OF THE JOIST, PROVIDE 6" METAL STUD WALL FROM TOP OF CMU WALL TO BOTTOM OF DECK SHEATHED WITH 2 LAYERS OF 1/2" TYPE X GYP. BOARD OR 1 LAYER OF 5/8" TYPE X GYP. BOARD MUST ALLOW MOVEMENT OF THE DEFLECTION TRACK, TOP OF CMU WALL MUST BE BRACED PER STRUCTURAL DRAWINGS. PROVIDE GYP. BOARD SHEATHING AT ALL SIDES EXPOSED TO VIEW. AT CMU WALLS PARALLEL TO THE JOIST STRUCTURE ABOVE, CMU WALLS ARE TO BE CONSTRUCTED TIGHT TO DECK, CUT TOP OF MASONRY TO FOLLOW SLOPE OF ROOF DECK.

NOTE: REFER TO ENLARGED REFLECTED CEILING PLANS FOR ADDITIONAL FINISHES

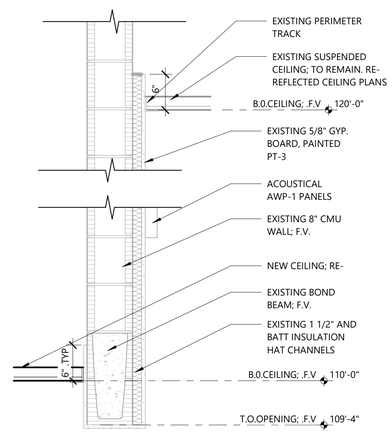

E1 Enlarged Ceiling Detail

1" = 1'-0" Ref: A5/ A2.4

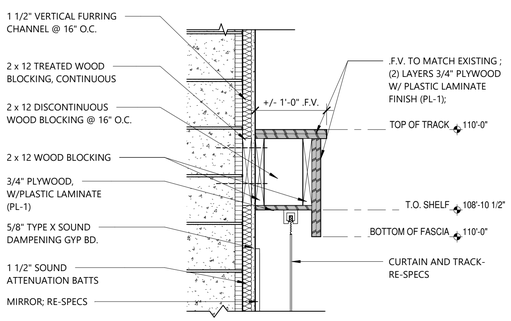

A1 Enlarged Detail

1" = 1'-0" Ref: A13/ A5.2

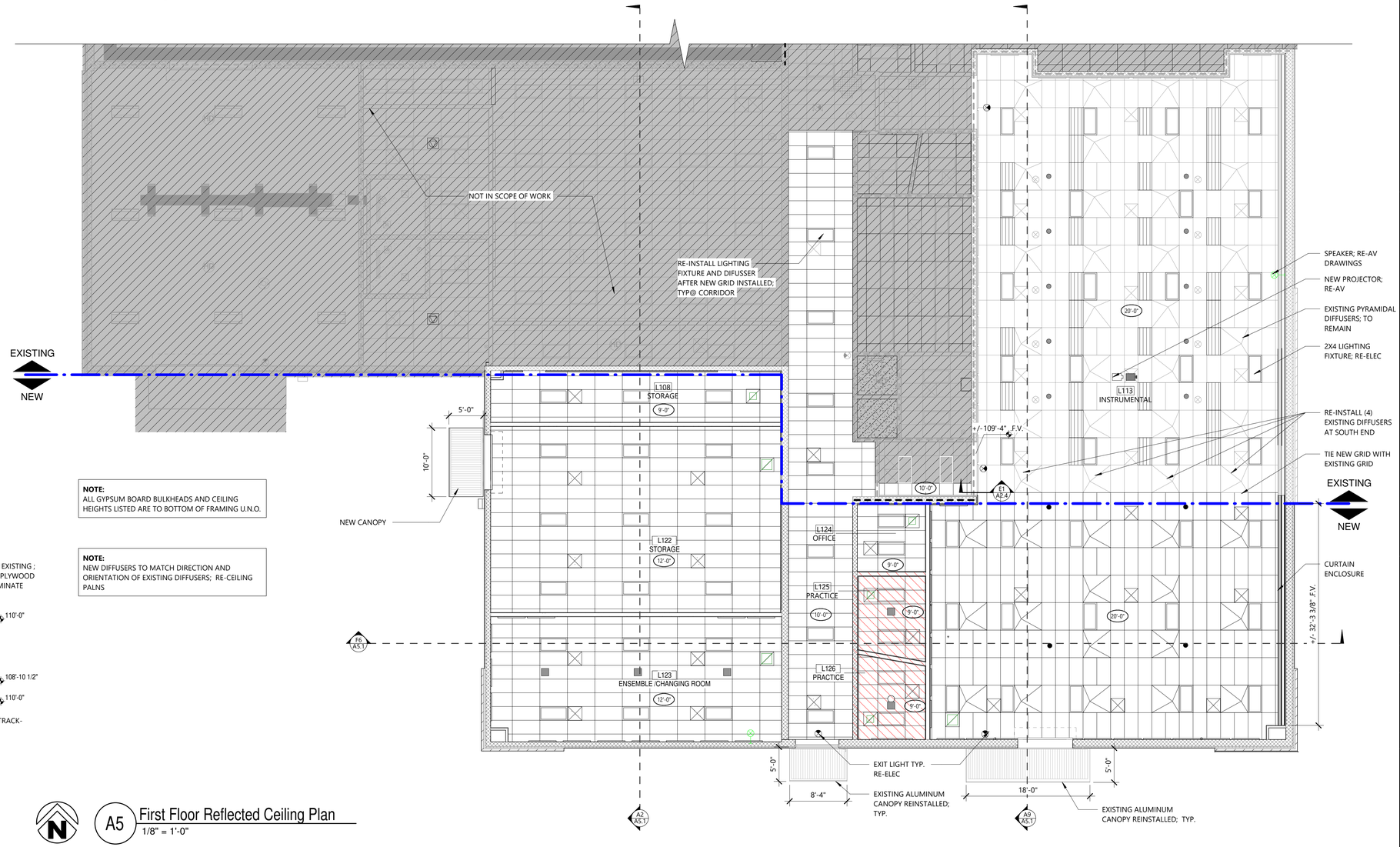

NOTE:
ALL GYPSUM BOARD BULKHEADS AND CEILING HEIGHTS LISTED ARE TO BOTTOM OF FRAMING U.N.O.

NOTE:
NEW DIFFUSERS TO MATCH DIRECTION AND ORIENTATION OF EXISTING DIFFUSERS; RE-CEILING PALNS

A5 First Floor Reflected Ceiling Plan

1/8" = 1'-0"

HIGHT JACKSON ASSOCIATES, P.A. REGISTERED ARCHITECTS Certificate C 349 ARKANSAS

REGISTERED ARCHITECT TIMOTHY L. SCHMIDT LICENSE NO. 9405 STATE OF ARKANSAS

Hight Jackson ASSOCIATES
5201 W Village Parkway, Suite 300 | Rogers, Arkansas 72758 | (479) 464-4965 | www.hjarch.com

An Addition for BWHS
BWHS Band Addition
1351 Gamble Rd, Centerton, AR 72719

DRAWN BY: MS
CHECK BY: TS
ISSUE DATE: 04/06/2026
PROJECT NO. 2421
REVISION DATES

FIRST FLOOR REFLECTED CEILING PLAN
SHEET
A2.4

COPYRIGHT 2026
THESE DRAWINGS AND SPECIFICATIONS ARE THE EXCLUSIVE PROPERTY OF HIGHT JACKSON ASSOCIATES, PA. USE OR REPRODUCTION IS PROHIBITED WITHOUT WRITTEN CONSENT

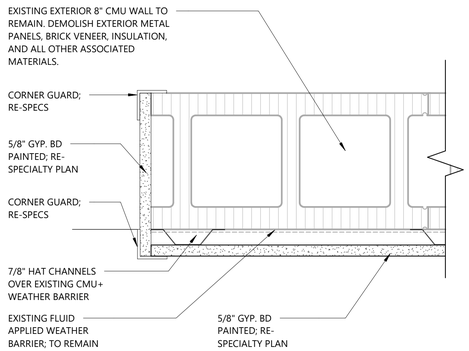

K1 Enlarged Plan Detail
3" = 1'-0" Ref: A5/ A2.1

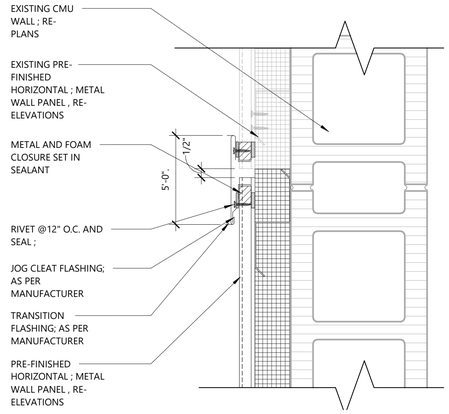

K5 Enlarged Plan Detail
3" = 1'-0" Ref: B2/ A4.1

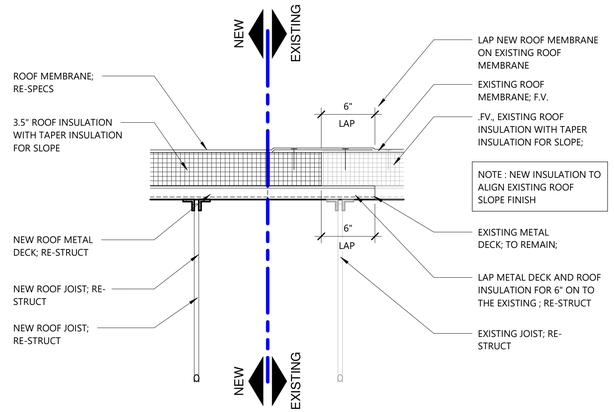

K8 Enlarged Detail
1 1/2" = 1'-0" Ref: A5/ A2.5

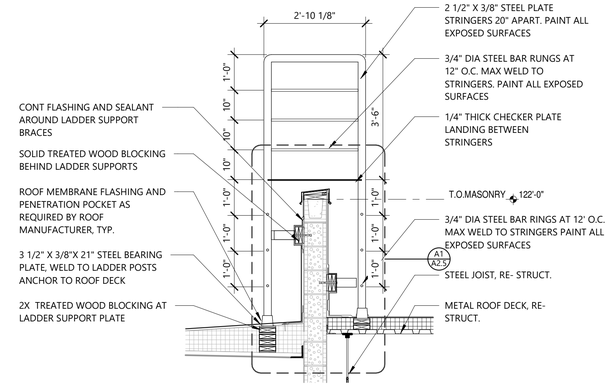

K13 A2.5 - Roof Ladder Section
1/2" = 1'-0" Ref: A5/ A2.5

ROOF PLAN GENERAL NOTES

1. ALL "FLAT" ROOFS TO BE PROVIDED WITH A MINIMUM SLOPE OF 1/4 : 12. NO PONDING WATER IS ALLOWED
2. MAINTAIN A 6'-0" MINIMUM DISTANCE BETWEEN ROOF DRAINS AND THE BACK OF PARAPET WALLS
3. ALL DOWNSPOUTS THAT DISCHARGE ONTO A LOWER ROOF ARE TO BE PROVIDED WITH A METAL SPLASH PAN PER DETAIL XX/XXXX
4. ALL UTILITIES ON ROOF TO BE PROVIDED WITH THE PROPER SUPPORTS; REF-PLUMBING AND ELECTRICAL
5. ALL EXPOSED GAS PIPING TO BE PAINTED, REFER TO PLUMBING SPECIFICATIONS
6. CONDENSATE DRAIN LINES TO DISCHARGE DIRECTLY INTO ROOF DRAIN OR GUTTER. DO NOT DISCHARGE ONTO ROOF SURFACE
7. ROOF HATCH TO BE PAINTED PER SPECIFICATIONS

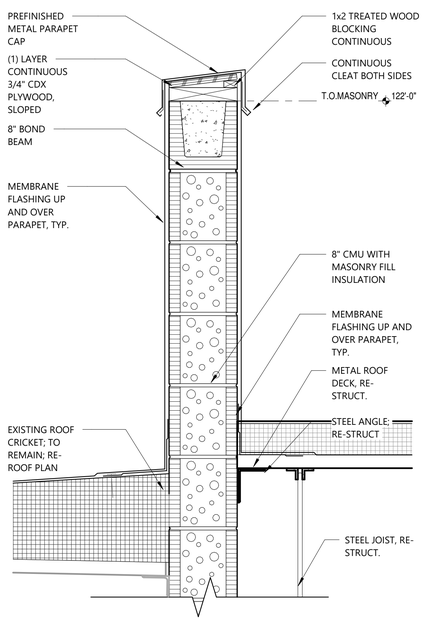

A1 Enlarged Detail
1 1/2" = 1'-0" Ref: A5/ A2.5

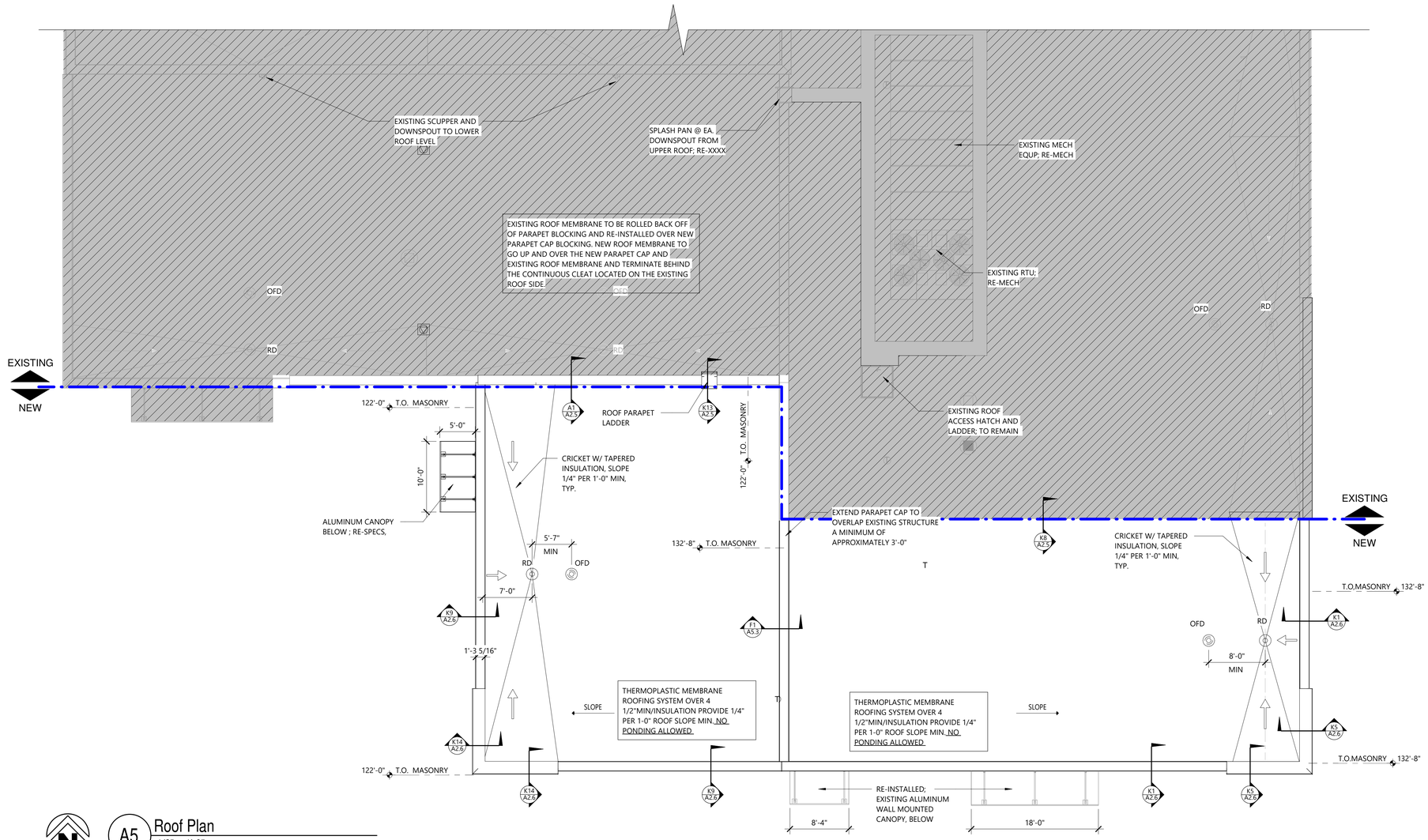

A5 Roof Plan
1/8" = 1'-0"

HIGHT JACKSON ASSOCIATES, P.A
REGISTERED ARCHITECTS
Certificate C 349
ARKANSAS

REGISTERED ARCHITECT
TIMOTHY L. SCHMIDT
LICENSE NO. 9405
STATE OF ARKANSAS

Hight Jackson ASSOCIATES
5201 W Village Parkway, Suite 300 | Rogers, Arkansas 72758 | (479) 464-4965 | www.hjarch.com

An Addition for BWHS
BWHS Band Addition
1351Gamble Rd, Centerton, AR 72719

DRAWN BY: MS
CHECK BY: TS
ISSUE DATE: 04/06/2026
PROJECT NO. 2421
REVISION DATES

ROOF PLAN
SHEET
A2.5

COPYRIGHT 2026
THESE DRAWINGS AND SPECIFICATIONS ARE THE EXCLUSIVE PROPERTY OF HIGHT JACKSON ASSOCIATES PA. USE OR REPRODUCTION IS PROHIBITED WITHOUT WRITTEN CONSENT

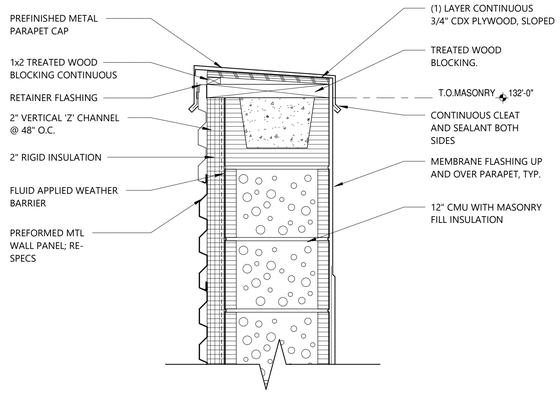

K1 Parapet Detail
1 1/2" = 1'-0" Ref: A5/ A2.5

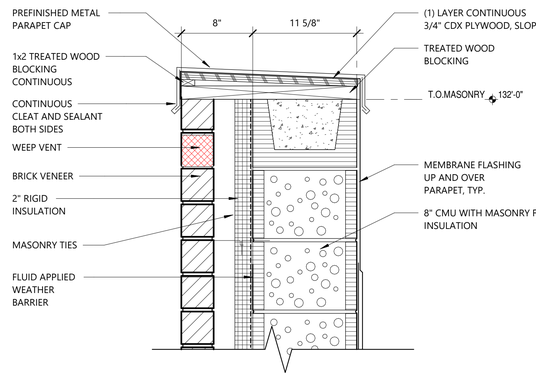

K5 Parapet Detail
1 1/2" = 1'-0" Ref: A5/ A2.5

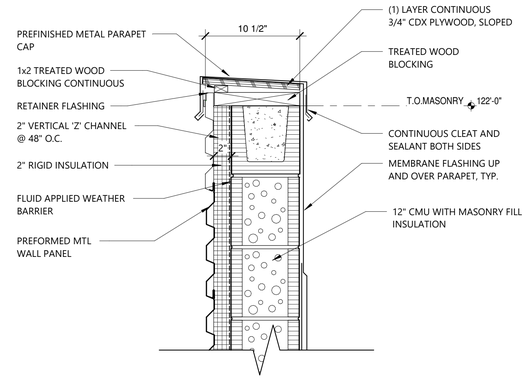

K9 Parapet Detail
1 1/2" = 1'-0" Ref: A5/ A2.5

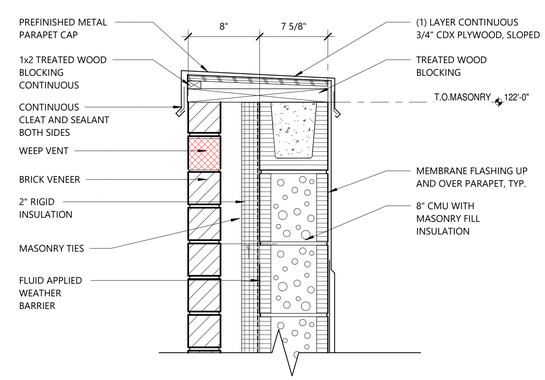

K14 Parapet Detail
1 1/2" = 1'-0" Ref: A5/ A2.5

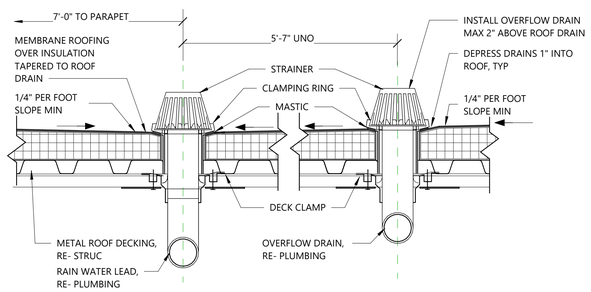

F1 A2.11 - Typ Roof Drain Detail
1 1/2" = 1'-0"

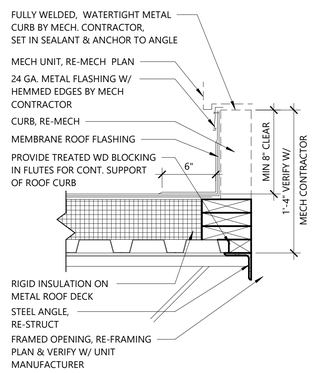

F5 A2.11 - Typ. Rooftop Equipment Curb Detail
1 1/2" = 1'-0"

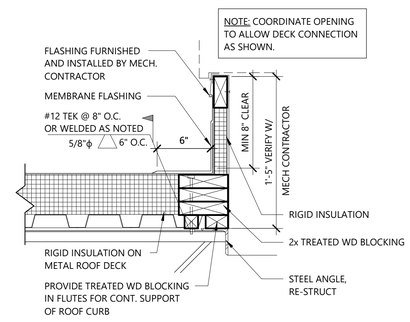

F9 A2.11 - Typ. Exhaust Fan Curb Detail
1 1/2" = 1'-0"

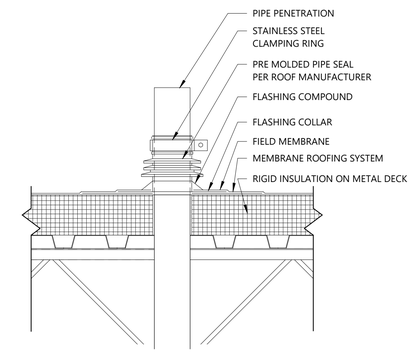

F14 A2.11 - Typ. Pipe Penetration
1 1/2" = 1'-0"

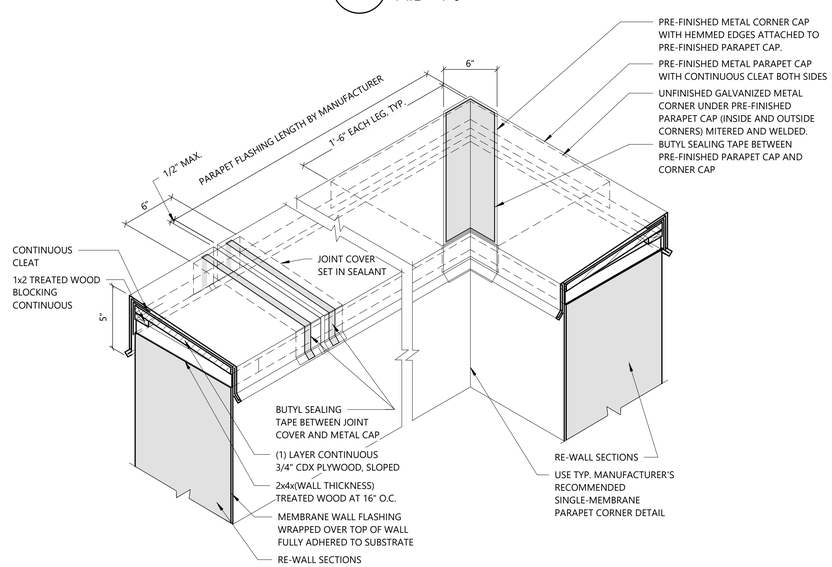

A9 A2.11 - Typ. Metal Parapet Cap Detail
1 1/2" = 1'-0"

NOTES:
1. PIPING SHALL BE SUPPORTED AT ALL ELBOWS AND TEES AT 6FT MAX. SPACING. PIPING SHALL BE SLOPED AND ROUTED TO PREVENT TRAPPING CONDENSATE (EXCEPT AT DIRT LEGS) ND TO FACILITATE CONDENSATE DRAINAGE.
2. DO NOT ATTACHED BLOCKING TO ROOF. PROVIDE ADDITIONAL ROOFING MEMBRANE PAD BELOW SUPPORT AS SHOWN.

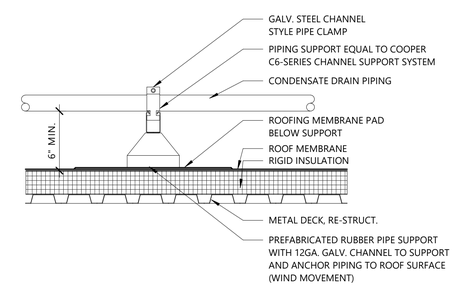

A14 Typ. Condensate Piping Support
1" = 1'-0"

HIGHT . JACKSON . ASSOCIATES, P.A
REGISTERED ARCHITECTS
Certificate C 349
ARKANSAS

REGISTERED ARCHITECT
TIMOTHY L. SCHMIDT
LICENSE NO. 9405
STATE OF ARKANSAS

Hight Jackson ASSOCIATES
5201 W Village Parkway, Suite 300 | Rogers, Arkansas 72758 | (479) 464-4965 | www.hjarch.com

An Additon for BWHS
BWHS Band Addition
1351 Gamble Rd, Centerton, AR 72719

DRAWN BY. MS
CHECK BY. TS
ISSUE DATE 04/06/2026
PROJECT NO. 2421
REVISION DATES

ROOF DETAILS
S H E E T
A2.6

COPYRIGHT 2026
THESE DRAWINGS AND SPECIFICATIONS ARE THE EXCLUSIVE PROPERTY OF HIGHT JACKSON ASSOCIATES, PA. USE OR REPRODUCTION IS PROHIBITED WITHOUT WRITTEN CONSENT

Door Types

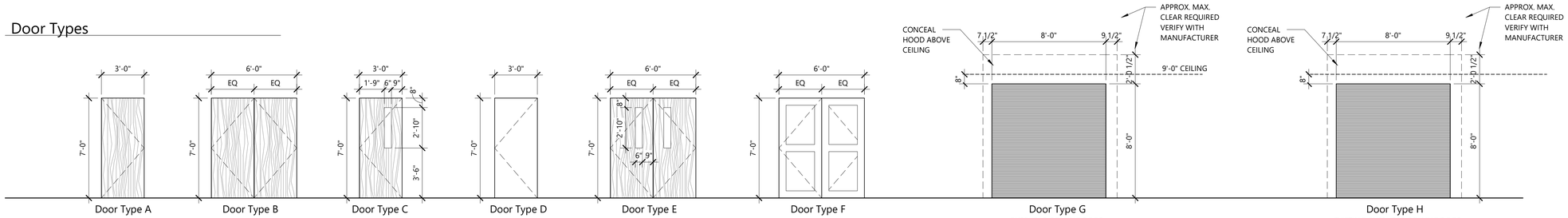

Door Type A
FLUSH WOOD DOOR, SOLID CORE, STAINED

Door Type B
FLUSH WOOD DOOR, SOLID CORE, STAINED

Door Type C
FLUSH WOOD DOOR, SOLID CORE, STAINED
1/4" CLEAR TEMPERED GLASS

Door Type D
HOLLOW METAL DOOR, PAINTED; EXT. LOCATIONS INSULATED AND GALVANIZED RE--SPECS.

Door Type E
FLUSH WOOD DOOR, SOLID CORE, STAINED
1/4" CLEAR TEMPERED GLASS

Door Type F
ALUMINUM STOREFRONT DOOR -1" INSULATING TEMPERED TINTED GLASS, AT INTERIOR DOOR PROVIDE 1/4" CLEAR TEMPERED GLASS

Door Type G
OVERHEAD ROLLING DOOR, MOTORIZED

Door Type H
EXISTING OVERHEAD ROLLING DOOR, MOTORIZED; RELOCATED TO EXTERIOR WALL; RE-PLANS

Door Frame & Window Frame General Notes

1 PROVIDE BLOCKING IN GYPSUM BOARD AND STUD WALLS TO ATTACH AND SUPPORT ALL WALL MOUNTED HARDWARE
2 PROVIDE REINFORCING IN HOLLOW METAL AND ALUMINUM DOOR AND FRAMES AS REQUIRED TO PROPERLY SECURE HARDWARE, RE- SPECS
3 PROVIDE SILENCERS FOR ALL HOLLOW METAL DOOR FRAMES UNLESS WEATHER STRIPPING IS PROVIDED
4 ANCHOR THE RECEIVING END OF RECESSED FLUSH BOLTS AND SURFACE MOUNTED BOLTS IN EPOXY CONCRETE AT CONCRETE FLOORS
5 REFER TO DOOR TAG AND SPECIFCATION SECTION 08 71 00 FOR HARDWARE SETS AT HOLLOW METAL DOOR FRAMES
6 DOOR LEAVES ARE STANDARD 3'-0" WIDE AND 7'-0" HIGH. REFER TO FLOOR PLAN DIMENSIONS AND NOTES ON DOOR SCHEDULE FOR EXCEPTIONS
7 DETAILS TO NOT INDICATE DOOR SWING. REFER TO ARCHITECTURAL FLOOR PLANS FOR DOOR SWING
8 CONTRACTOR IS RESPONSIBLE FOR VERIFICATION AND COORDINATION OF FRAME THROAT DEPTHS WITH WALL THICKNESS PRIOR TO ORDERING FRAMES
9 EACH LEAF OF ALL EXTERIOR HOLLOW METAL DOORS, UNLESS NOTED OTHERWISE, IS TO RECEIVE THE FOLLOWING ITEMS: ADA ACCESSIBLE CLOSER, CONTINUOUS HINGES, WEATHERSTRIPPING SET, ADA THRESHOLD (SET IN BUTYL RUBBER SEALANT), REMOVABLE MULLION (FOR PAIR OF DOORS), MULLION SEAL (FOR REMOVABLEMULLIONS), DOOR SHOE, DRIP CAP, RIM MOUNTED EXIT AND VANDAL RESISTANT TRIM (RE- HARDWARE SETS IN SPEC. SECTION 08 71 00)
10 WHERE FLOOR MOUNTED STOPS AND OVERHEAD STOPS ARE USED ON THE SAME DOOR, ALIGN STOPS SO THAT DOOR DOES NOT TWIST WHEN HELD AGAINST STOPS
11 COORDINATE MOUNTING HEIGHTS OF LATCHES, EXIT DEVICES AND OTHER HARDWARE ITEMS WITH DOOR LITE DIMENSIONS
12 PROVIDE CONTINUOUS HINGES ON ALL EXTERIOR HOLLOW METAL AND ALUMINUM STOREFRONT DOORS AND VESTIBULE ALUMINUM STOREFRONT DOORS
13 FOR ALL DOORS UP TO 3'-0" WIDE- LEAFS ARE TO HAVE 3 HINGES ON EACH LEAF UNLESS NOTED OTHERWISE. DOORS 3'-6" AND WIDER ARE TO HAVE 4 HINGES ON EACH
LEAF, UNLESS NOTED OTHERWISE
14 PROVIDE GALVANIZED, INSULATED, HOLLOW METAL DOORS AT EXTERIOR LOCATIONS
15 ALL CLOSERS TO HAVE PARALLEL ARMS, UNLESS NOTED OTHERWISE OR INSTALLATION REQUIRES ALTERNATE ARM TYPE
16 PROVIDE FIRE GASKET AROUND PERIMETER OF ALL FIRE RATED DOORS IN ACCORDANCE WITH INTERNATIONAL BUILDING CODE.
17 VERIFY LINTEL CONDITIONS WITH STRUCTURAL LINTEL PLAN
18 REFER TO DOOR TAGS AND SPEC. SECTION 08 43 13 FOR HARDWARE SETS AT ALUMINUM STOREFRONT FRAMES

Access Control Notes

1 AT DOORS TO BE CONTROLLED BY ACCESS CONTROL SYSTEM, COORDINATE LOCATION AND INSTALLATION OF JUNCTION BOXES AND CONDUIT WITH THE ELECTRICIAN AND ACCESS CONTROL CONTRACTOR.
2 CONDUIT MUST BE ROUTED FROM AN ACCESSIBLE POINT ABOVE CEILING TO FRAME JAMB AT WIRE TRANSFER DEVICE LOCATION.
3 REFER TO SPECIFICATION SECTION 08 43 13 ALUMINUM STOREFRONT, DOORS AND EXTERIOR FIXED UNITS.
4 REFER TO SPECIFICATION SECTION 08 71 00 FINISH DOOR HARDWARE FOR ACCESS CONTROL HARDWARE TO BE PROVIDED AND INSTALLED.
5 REFER TO SPECIFICATION SECTION 28 13 01 AND ELECTRICAL DRAWINGS FOR ACCESS CONTROL SYSTEM COMPONENTS, JUNCTION BOXES, AND CONDUIT AT DOUBLE DOORS, DOOR LEAF CLOSEST TO ACCESS CONTROL TO BE CONTROLLED BY ACCESS CONTROL SYSTEM.

Door Schedule

wtwt	DETAILS HEAD	DETAILS JAMB	DETAILS SILL	NOTES
K122	A1/A5.3	E9/A3.0, E13/A3.0	B10 / A3.1	
L113	H13/A3.1	E13/A3.1,A9/A3.0	B13/A3.1 (SIM)	REINSTALLED O.H. COILING DOOR
L113A	H6/A3.1	E6/A3.1, E10/A3.1	B6/A3.1	
L122	L1/A3.1	E1/A3.1 (SIM)		
L122A	H10/A3.1	B2/A3.1,A13/A3.0	B13/A3.1 (SIM)	O.H. COILING DOOR
L123	H1/A3.1	E1/A3.1		
L124	H3/A3.1 (SIM)	E3/A3.1		
L125	H1/A3.1	E1/A3.1		
L125A	H3/A3.1	E3/A3.1		
L126	H1/A3.1	E1/A3.1		
L126A	H3/A3.1	E3/A3.1		

Door Frame Types

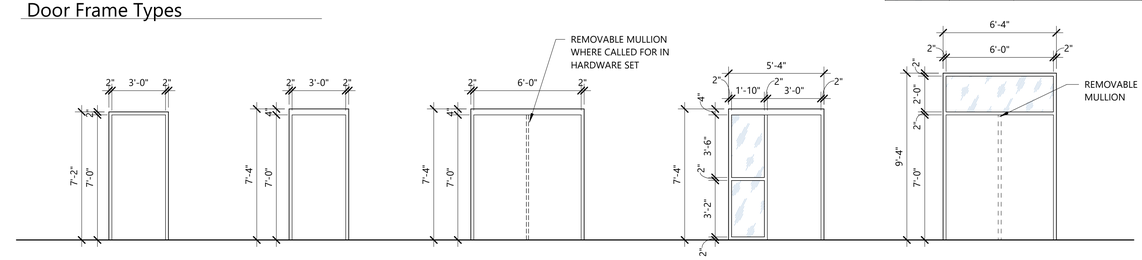

Frame Type 1
HOLLOW METAL FRAME PAINTED

Frame Type 2
HOLLOW METAL FRAME PAINTED

Frame Type 3
HOLLOW METAL FRAME PAINTED

Frame Type 5
HOLLOW METAL FRAME PAINTED
1/4" CLEAR GLASS, TEMPERED GLASS WHERE REQUIRED BY CODE

Frame Type 6
ALUMINIUM STOREFRONT SYSTEM W/1" TINTED INSULATING LOW-E GLASS

GLASS TYPES SCHEDULE/LEGEND		
	GL-1	SECURITY GLASS

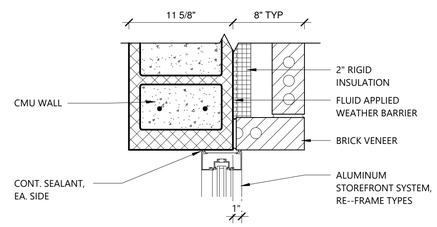

E9 Jamb Detail
1 1/2" = 1'-0"

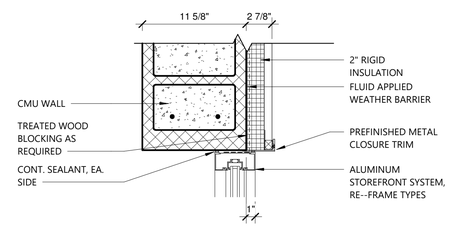

E13 Jamb Detail
1 1/2" = 1'-0"

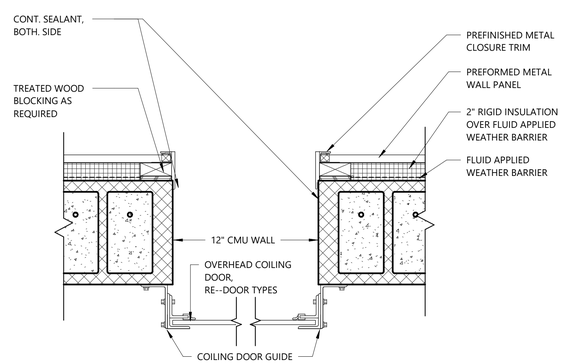

A9 Jamb Detail
1 1/2" = 1'-0"

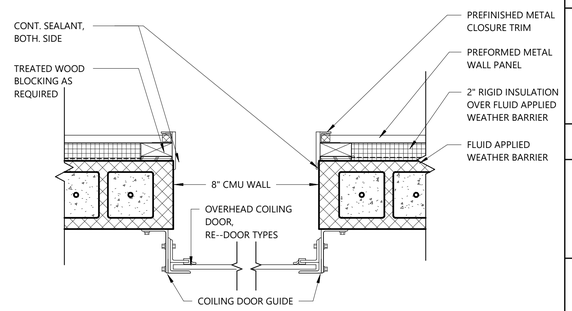

A13 Jamb Detail
1 1/2" = 1'-0" Ref: E2/ A1.1

HIGHT JACKSON ASSOCIATES, P.A.
REGISTERED ARCHITECTS
Certificate C 349
ARKANSAS

REGISTERED ARCHITECT
TIMOTHY L. SCHMIDT
LICENSE NO. 9405
STATE OF ARKANSAS

Hight Jackson ASSOCIATES
5201 W Village Parkway, Suite 300 | Rogers, Arkansas 72758 | (479) 464-4965 | www.hjarch.com

An Additon for BWHS
BWHS Band Addition
1351Gamble Rd, Centerton, AR 72719

DRAWN BY. MS
CHECK BY. TS
ISSUE DATE 04/06/2026
PROJECT NO. 2421
REVISION DATES

DOOR SCHEDULE / DOOR / WINDOW / FRAME ELEVATIONS / DETAILS
S H E E T
A3.0

COPYRIGHT 2026
THESE DRAWINGS AND SPECIFICATIONS ARE THE EXCLUSIVE PROPERTY OF HIGHT JACKSON ASSOCIATES,PA. USE OR REPRODUCTION IS PROHIBITED WITHOUT WRITTEN CONSENT.

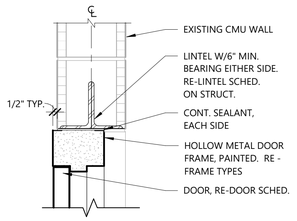

L1 Head Detail
1 1/2" = 1'-0"

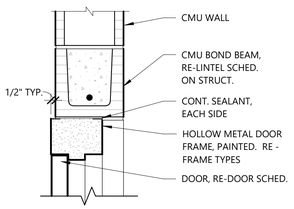

H1 Head Detail
1 1/2" = 1'-0"

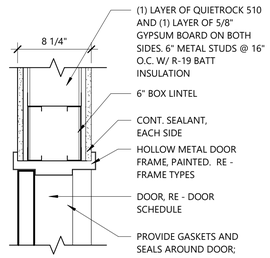

H3 Head Detail
1 1/2" = 1'-0"

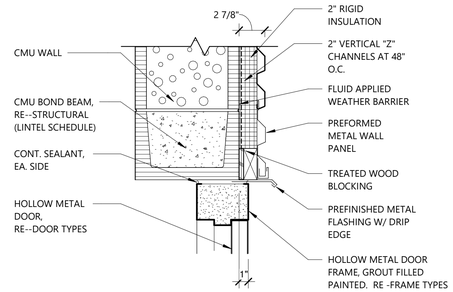

H6 Head Detail
1 1/2" = 1'-0"

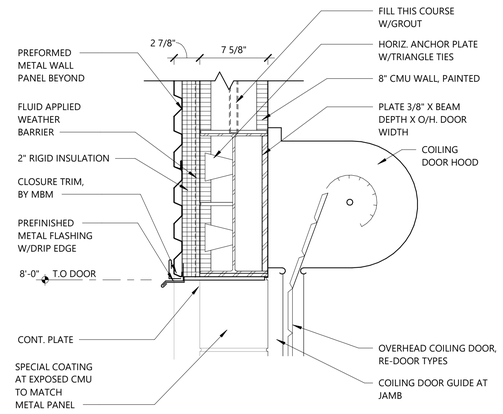

H10 Head Detail
1 1/2" = 1'-0"

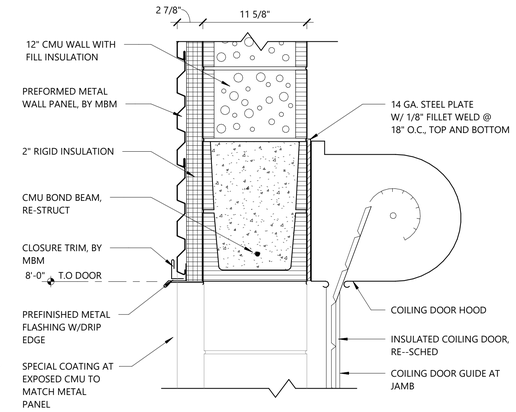

H13 Head Detail
1 1/2" = 1'-0"

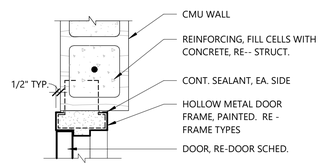

E1 Jamb Detail
1 1/2" = 1'-0"

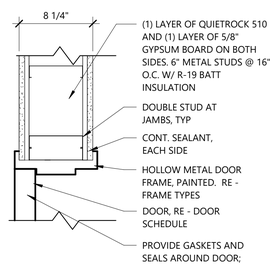

E3 Jamb Detail
1 1/2" = 1'-0"

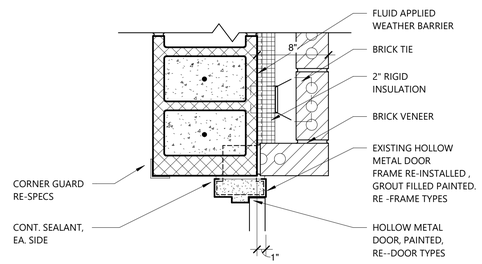

E6 Jamb Detail
1 1/2" = 1'-0"

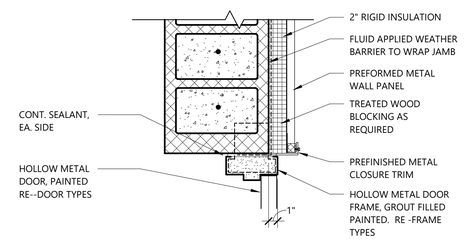

E10 Jamb Detail
1 1/2" = 1'-0"

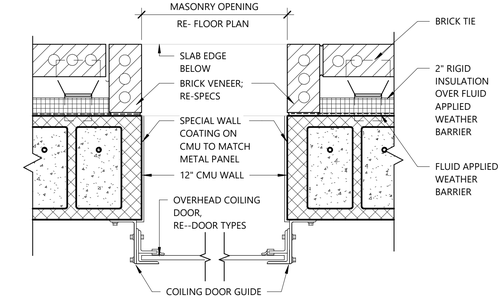

E13 Jamb Detail
1 1/2" = 1'-0"
Ref: A5/ A2.1

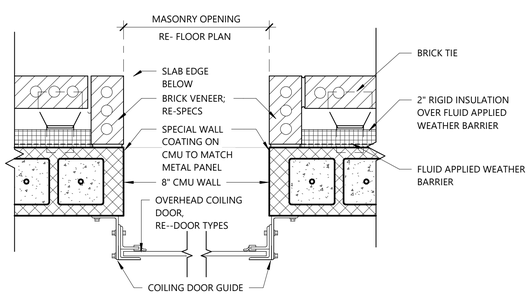

B2 Jamb Detail
1 1/2" = 1'-0"

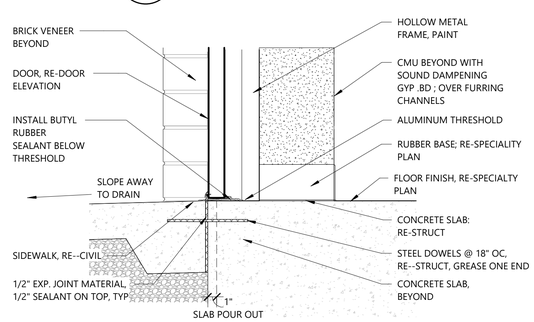

B6 Jamb Detail
1 1/2" = 1'-0"

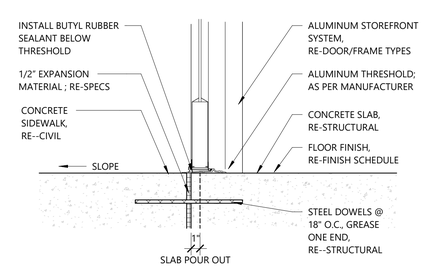

B10 Jamb Detail
1 1/2" = 1'-0"

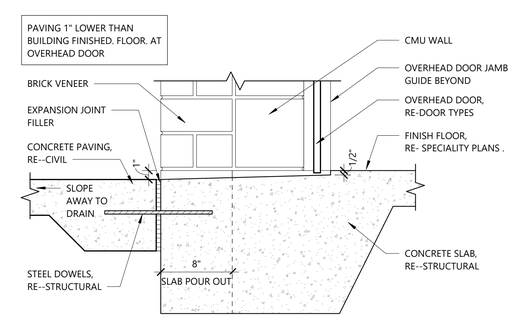

B13 Jamb Detail
1 1/2" = 1'-0"
Ref: A9/ A5.2

HIGHT JACKSON ASSOCIATES, P.A. REGISTERED ARCHITECTS Certificate C 349 ARKANSAS

REGISTERED ARCHITECT TIMOTHY L. SCHMIDT LICENSE NO. 9425 STATE OF ARKANSAS

Hight Jackson ASSOCIATES
5201 W Village Parkway, Suite 300 | Rogers, Arkansas 72758 | (479) 464-4965 | www.hjarch.com

An Addition for BWHS
BWHS Band Addition
1351 Gamble Rd, Centerton, AR 72719

DRAWN BY: MS
CHECK BY: TS
ISSUE DATE: 04/06/2026
PROJECT NO. 2421
REVISION DATES

DOOR / DETAILS

SHEET
A3.1

COPYRIGHT 2026
THESE DRAWINGS AND SPECIFICATIONS ARE THE EXCLUSIVE PROPERTY OF HIGHT JACKSON ASSOCIATES PA. USE OR REPRODUCTION IS PROHIBITED WITHOUT WRITTEN CONSENT

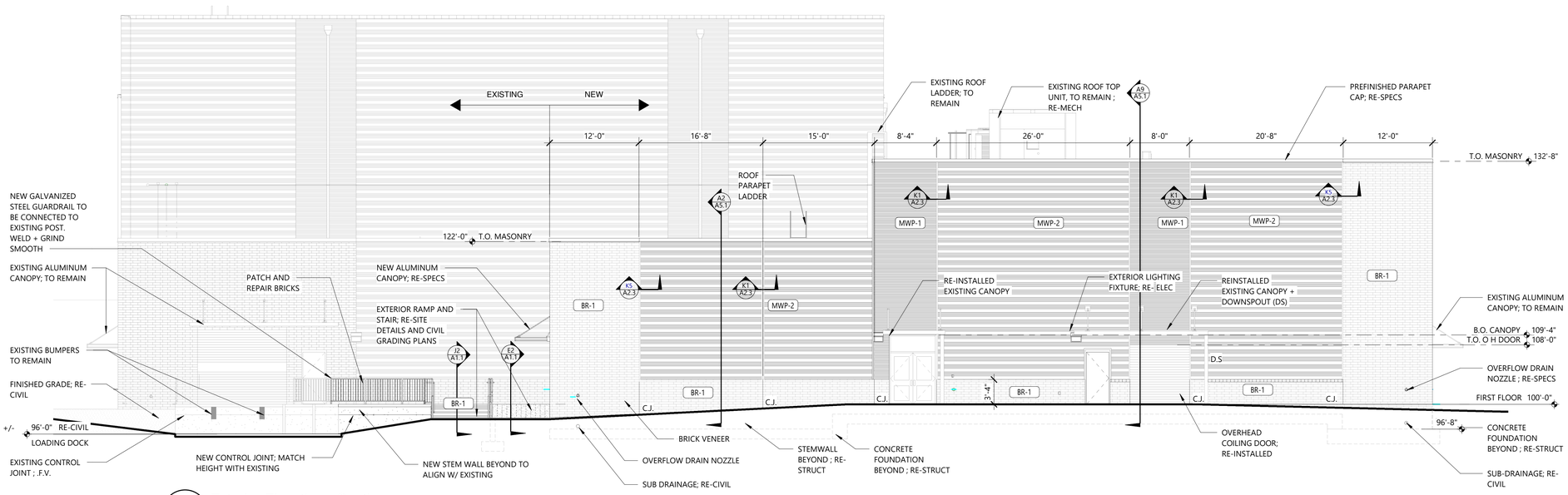

H2 Exterior Elevation - South
1/8" = 1'-0" Ref: A5/ A2.1

EXTERIOR MATERIALS SCHEDULE/LEGEND		
	BR-1	BRICK VENEER
	BR-EX	EXISTING BRICK VENEER
	MWP-1	METAL WALL PANELS - ZINC GRAY
	MWP-2	METAL WALL PANELS - ZINC GRAY
	EX- MWP-2	EXISTING METAL WALL PANEL

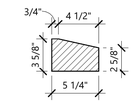

H15 Custom Brick Sill Shape
1 1/2" = 1'-0"

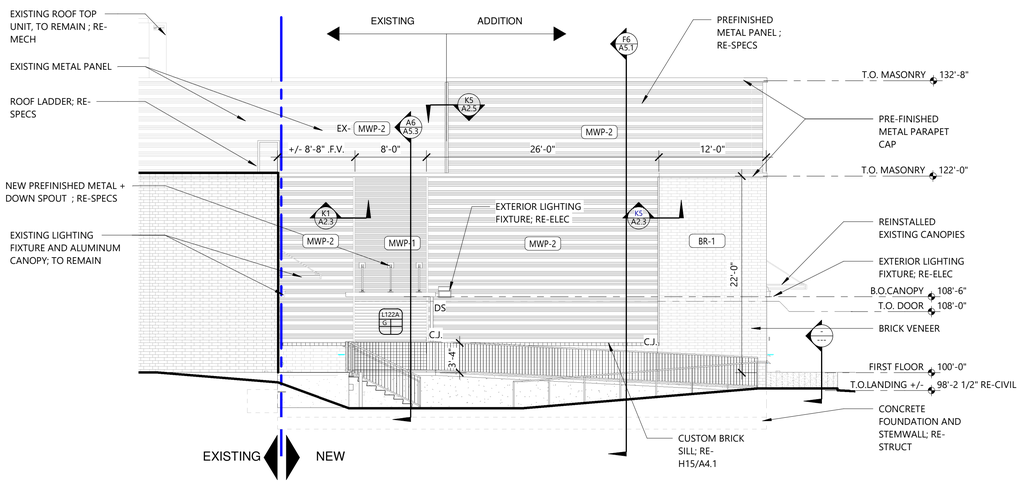

B2 Exterior Elevation - West
1/8" = 1'-0" Ref: A5/ A2.1

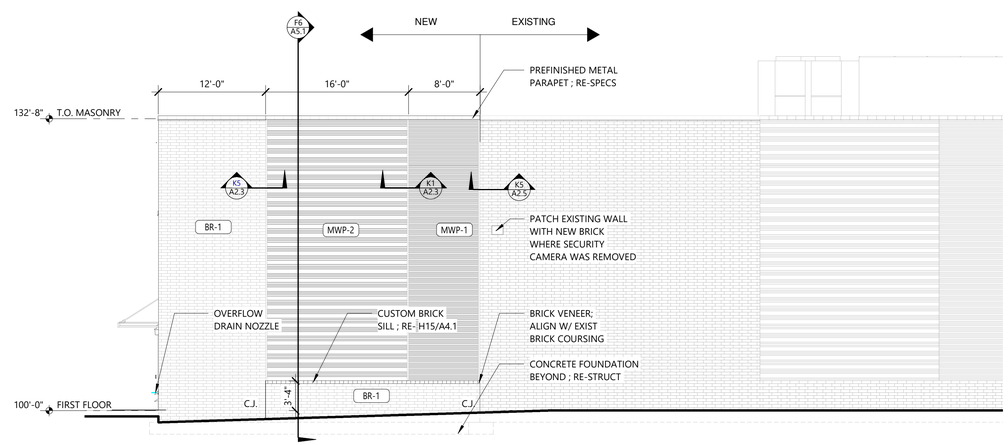

B10 Exterior Elevation - East
1/8" = 1'-0" Ref: A5/ A2.1

HIGHT JACKSON ASSOCIATES, P.A. REGISTERED ARCHITECTS Certificate C 349 ARKANSAS
REGISTERED ARCHITECT TIMOTHY L. SCHMIDT LICENSE NO. 9425 STATE OF ARKANSAS
Hight Jackson ASSOCIATES
5201 W Village Parkway, Suite 300 | Rogers, Arkansas 72758 | (479) 464-4965 | www.hjarch.com

An Additon for BWHS
BWHS Band Addition
1351Gamble Rd, Centerton, AR 72719

DRAWN BY: MS
CHECK BY: TS
ISSUE DATE: 04/06/2026
PROJECT NO.: 2421
REVISION DATES

EXTERIOR ELEVATIONS
SHEET
A4.1

COPYRIGHT 2026
THESE DRAWINGS AND SPECIFICATIONS ARE THE EXCLUSIVE PROPERTY OF HIGHT JACKSON ASSOCIATES, PA. USE OR REPRODUCTION IS PROHIBITED WITHOUT WRITTEN CONSENT.

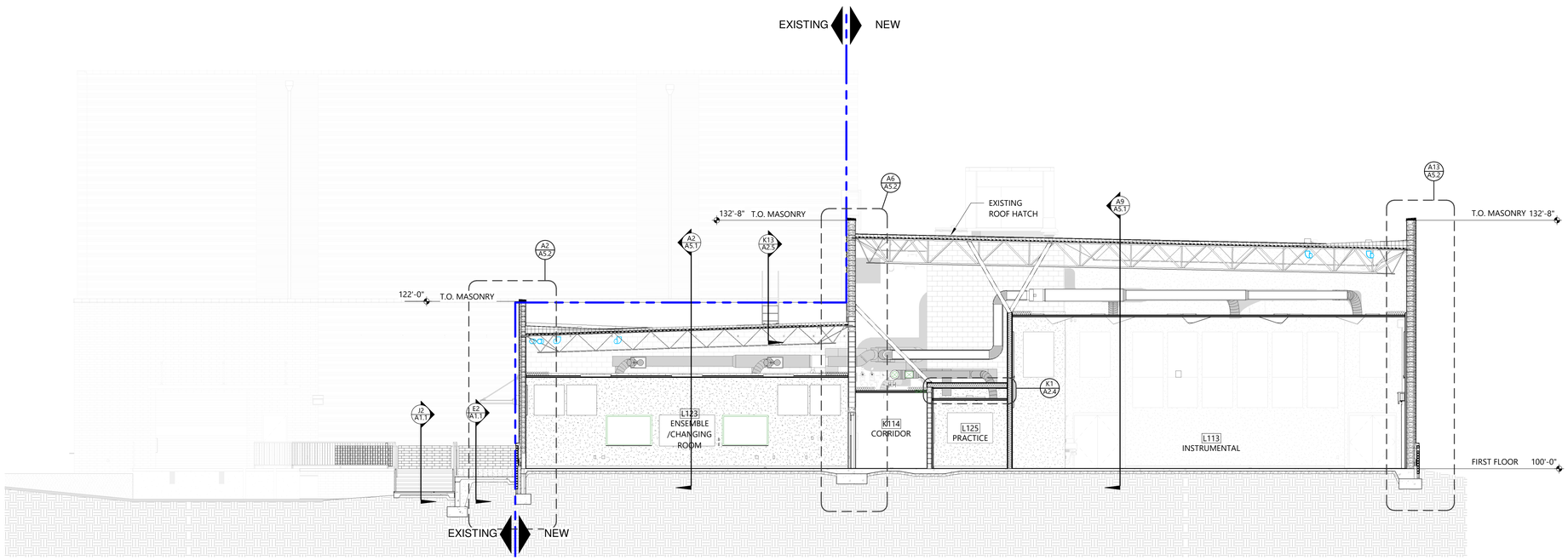

F6 Building Section
1/8" = 1'-0" Ref: A5/ A2.1

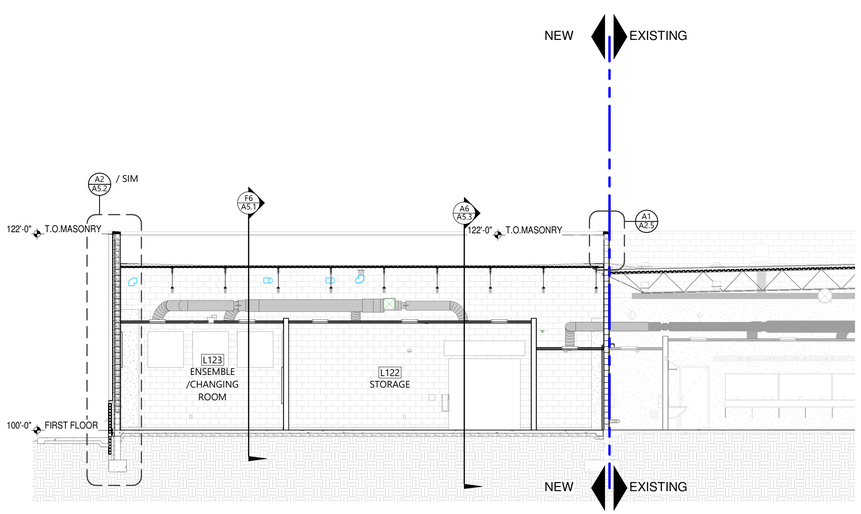

A2 Building Section
1/8" = 1'-0" Ref: A5/ A2.1

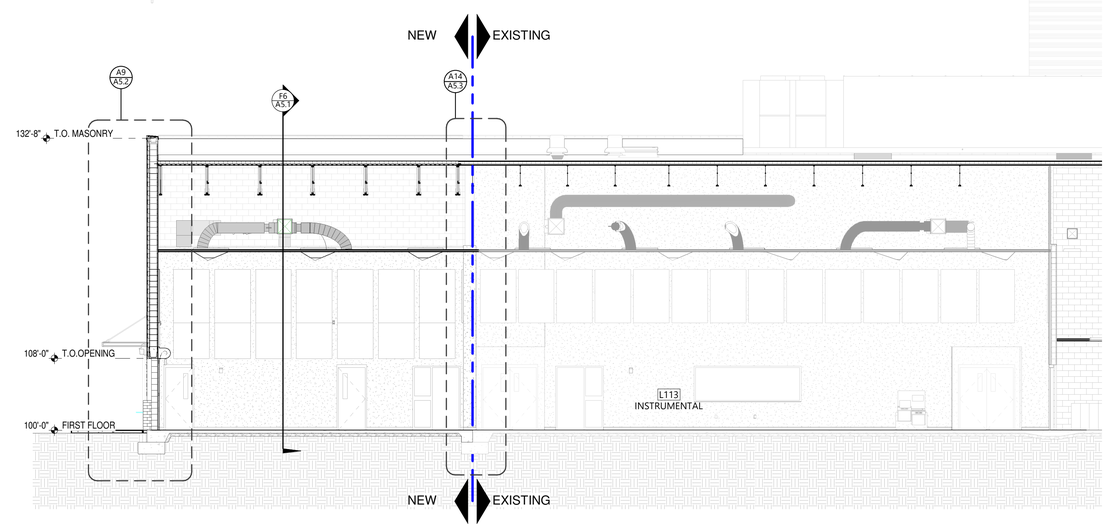

A9 Building Section
1/8" = 1'-0" Ref: A5/ A2.1

HIGHT JACKSON ASSOCIATES, P.A.
REGISTERED ARCHITECTS
Certificate C 349
ARKANSAS

REGISTERED ARCHITECT
TIMOTHY L. SCHMIDT
LICENSE NO. 9425
STATE OF ARKANSAS

Hight Jackson ASSOCIATES
5201 W Village Parkway, Suite 300 | Rogers, Arkansas 72758 | (479) 464-4965 | www.hjarch.com

An Addition for BWHS
BWHS Band Addition
1351 Gamble Rd, Centerton, AR 72719

DRAWN BY.
MS
CHECK BY.
TS
ISSUE DATE
04/06/2026
PROJECT NO.
2421
REVISION DATES

BUILDING SECTIONS
S H E E T
A5.1

COPYRIGHT 2026
THESE DRAWINGS AND SPECIFICATIONS ARE THE EXCLUSIVE PROPERTY OF HIGHT JACKSON ASSOCIATES PA. USE OR REPRODUCTION IS PROHIBITED WITHOUT WRITTEN CONSENT

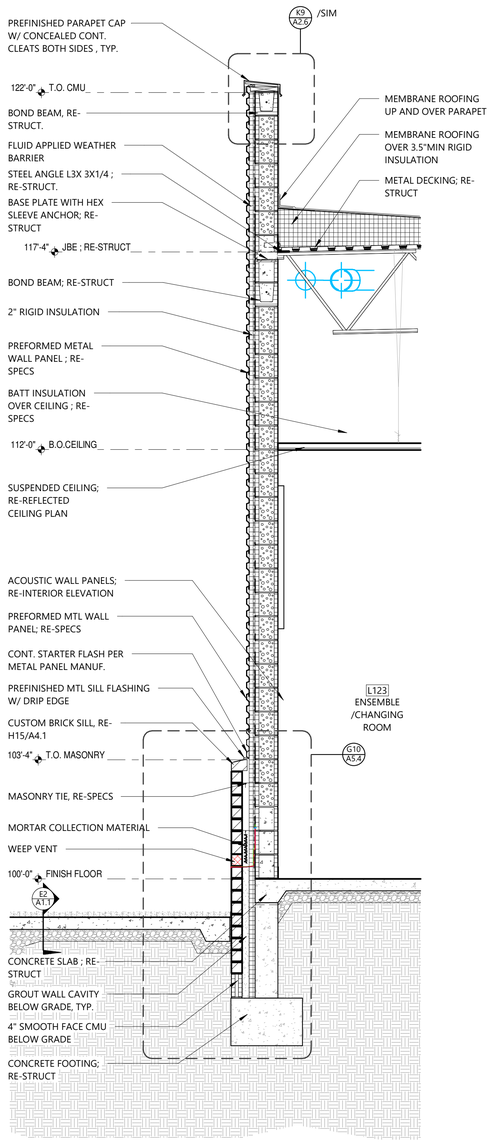

A2 Wall Section
1/2" = 1'-0"
Ref: A2/ A5.1

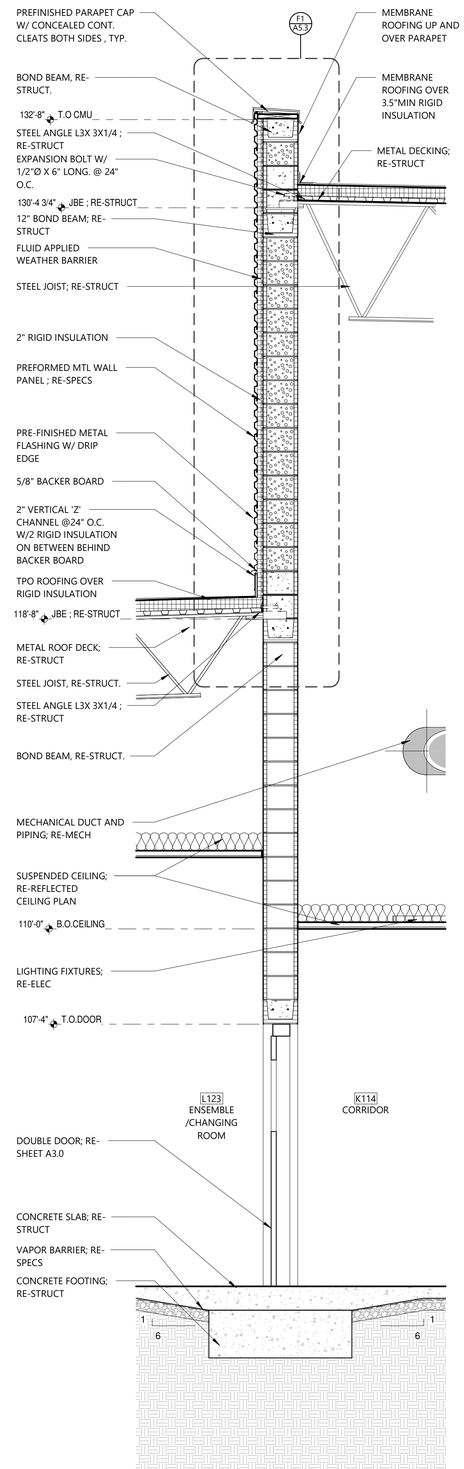

A6 Wall Section
1/2" = 1'-0"
Ref: F6/ A5.1

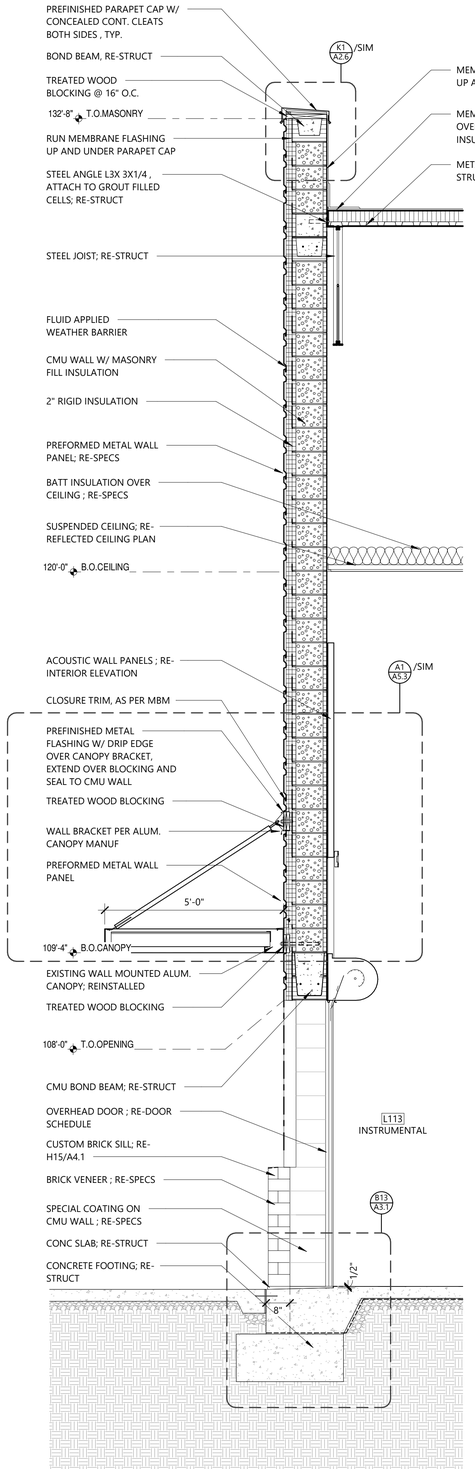

A9 Wall Section
1/2" = 1'-0"
Ref: A9/ A5.1

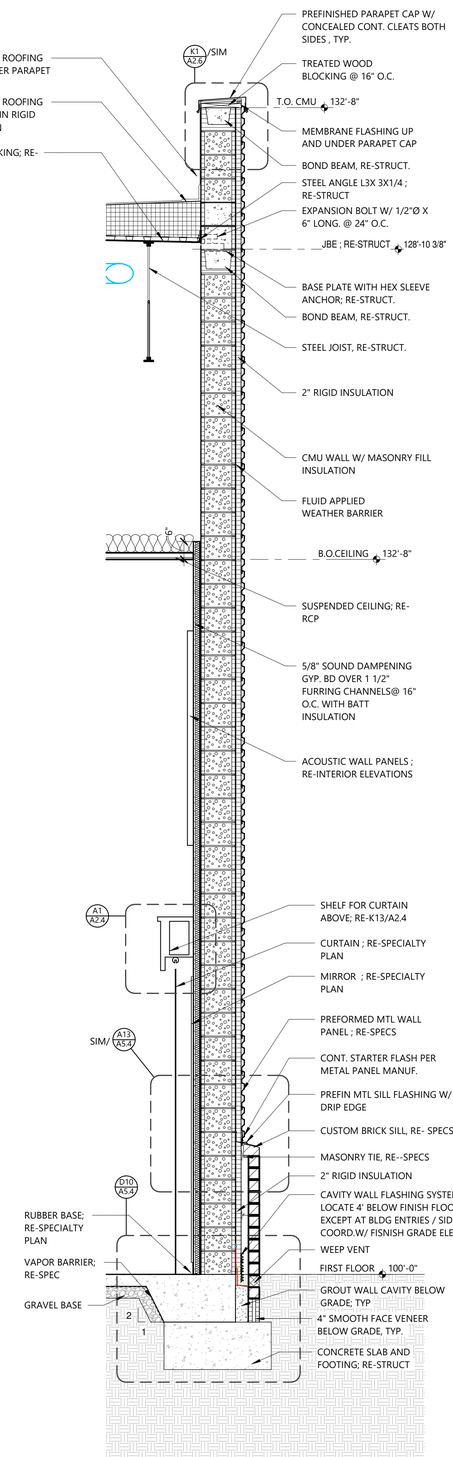

A13 Wall Section
1/2" = 1'-0"
Ref: F6/ A5.1

HIGHT JACKSON ASSOCIATES, P.A. REGISTERED ARCHITECTS Certificate C 349 ARKANSAS
REGISTERED ARCHITECT TIMOTHY L. SCHMIDT LICENSE NO. 9405 STATE OF ARKANSAS
Hight Jackson ASSOCIATES
5201 W Village Parkway, Suite 300 | Rogers, Arkansas 72758 | (479) 464-4965 | www.hjarch.com

An Addition for BWHS
BWHS Band Addition
1351 Gamble Rd, Centerton, AR 72719

DRAWN BY: MS
CHECK BY: TS
ISSUE DATE: 04/06/2026
PROJECT NO. 2421
REVISION DATES

WALL SECTIONS
SHEET
A5.2

COPYRIGHT 2026
THESE DRAWINGS AND SPECIFICATIONS ARE THE EXCLUSIVE PROPERTY OF HIGHT JACKSON ASSOCIATES PA. USE OR REPRODUCTION IS PROHIBITED WITHOUT WRITTEN CONSENT

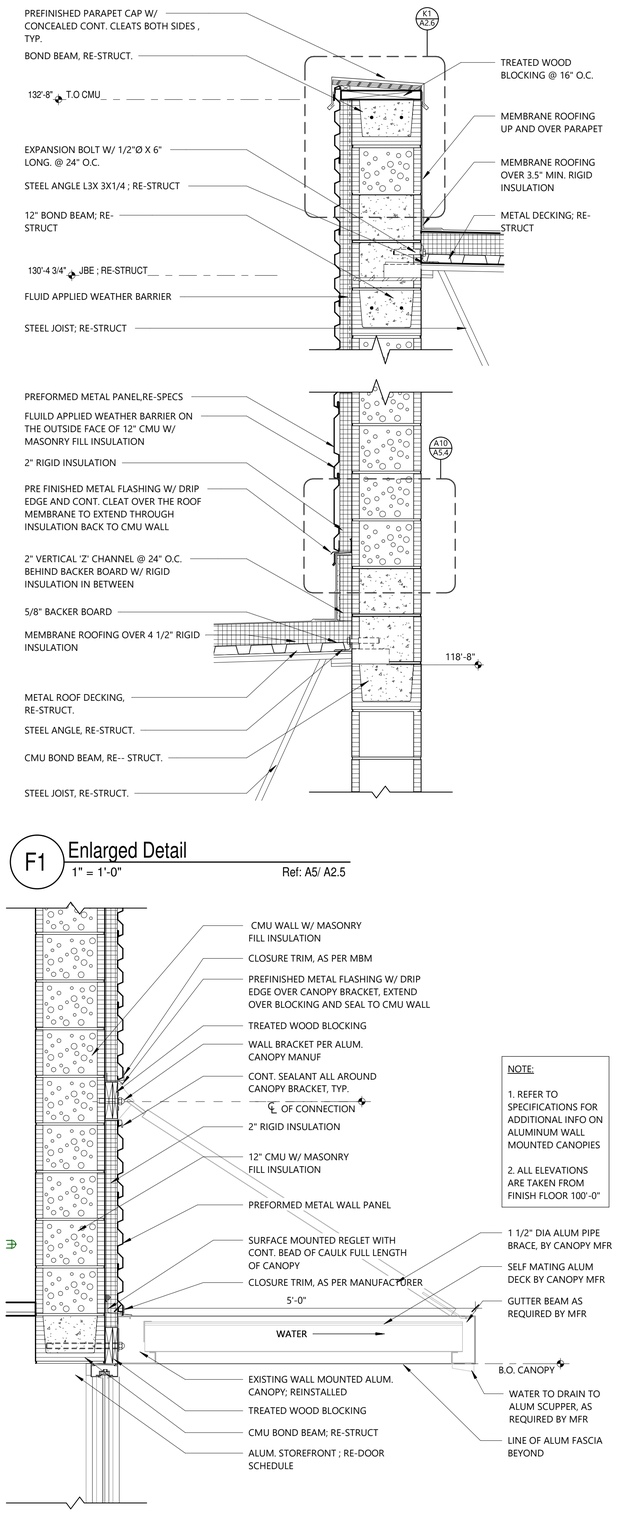

F1 Enlarged Detail
1" = 1'-0" Ref: A5/ A2.5

NOTE:

1. REFER TO SPECIFICATIONS FOR ADDITIONAL INFO ON ALUMINUM WALL MOUNTED CANOPIES

2. ALL ELEVATIONS ARE TAKEN FROM FINISH FLOOR 100'-0"

A1 Enlarged Detail
1" = 1'-0" Ref: A9/ A5.2

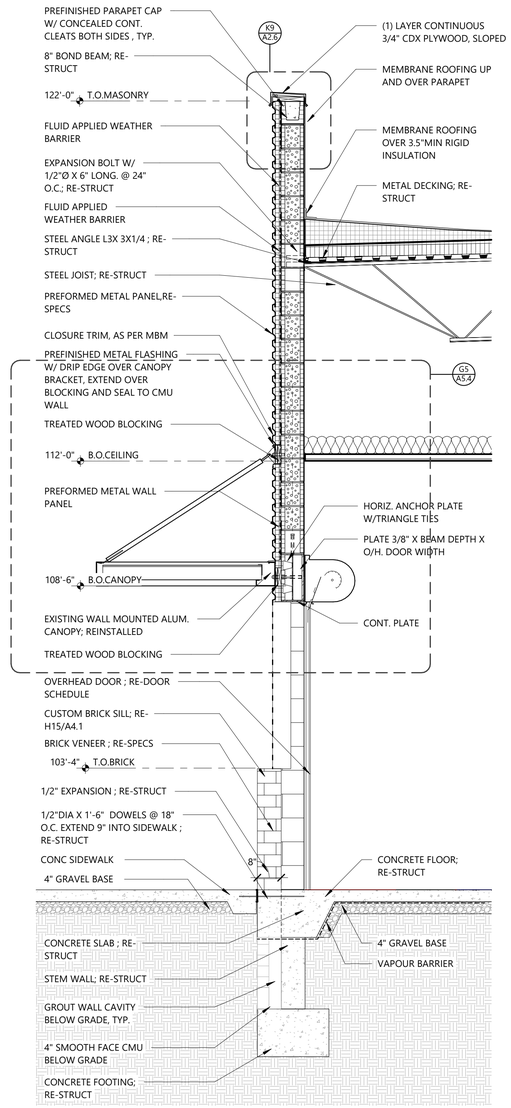

A6 Wall Section
1/2" = 1'-0" Ref: A5/ A2.1

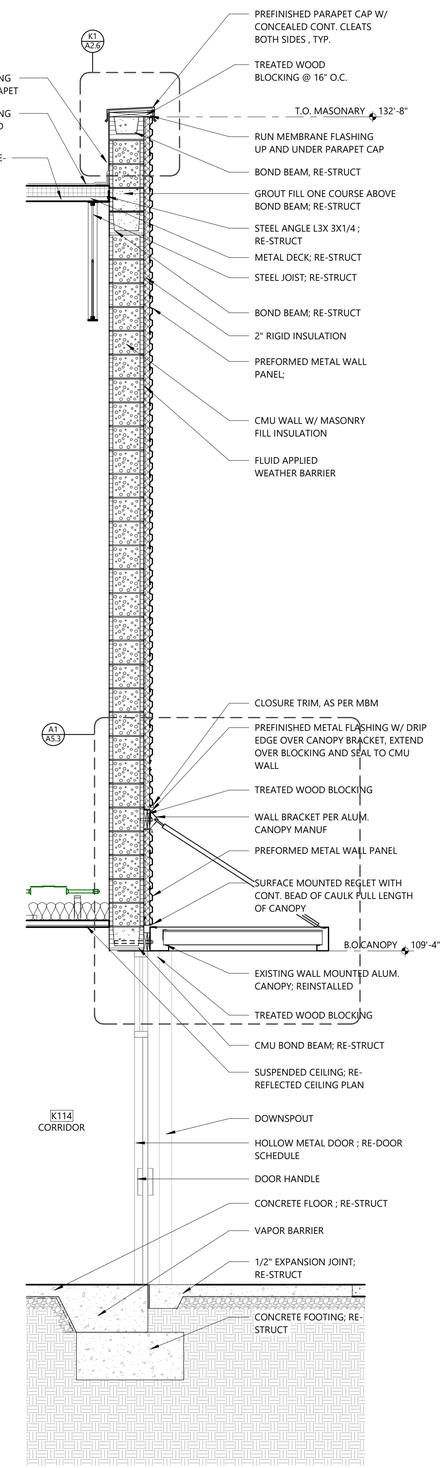

A10 Wall Section
1/2" = 1'-0" Ref: A5/ A2.1

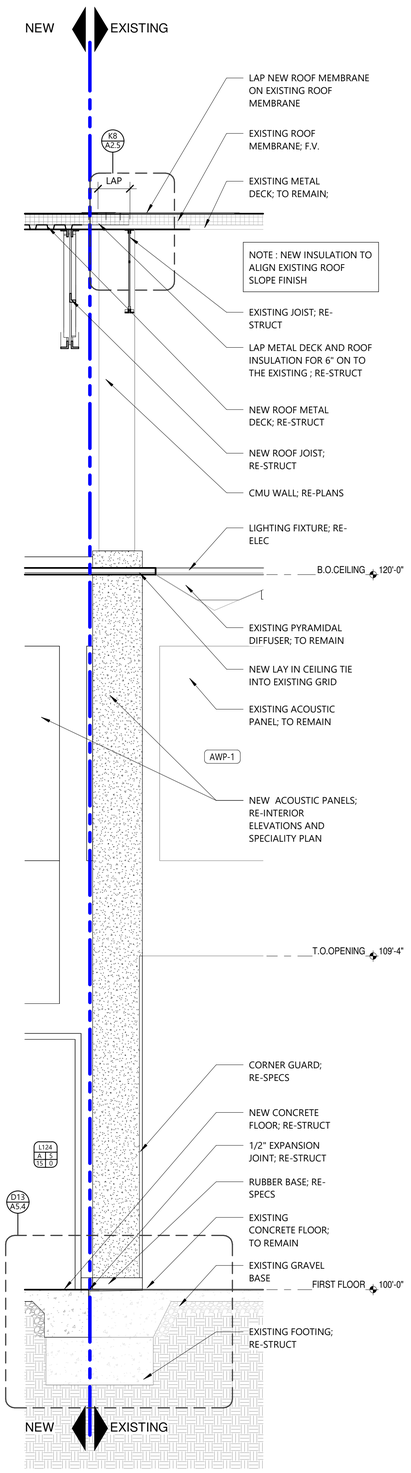

A14 Wall Section
1/2" = 1'-0" Ref: A9/ A5.1

HIGHT JACKSON ASSOCIATES, P.A
REGISTERED ARCHITECTS
Certificate C 349
ARKANSAS

REGISTERED ARCHITECT
TIMOTHY L. SCHMIDT
LICENSE NO. 9405
STATE OF ARKANSAS

Hight Jackson ASSOCIATES
5201 W Village Parkway, Suite 300 | Rogers, Arkansas 72758 | (479) 464-4965 | www.hjarch.com

An Addition for BWHS
BWHS Band Addition
1351Gamble Rd, Centerton, AR 72719

DRAWN BY.	MS
CHECK BY.	TS
ISSUE DATE	04/06/2026
PROJECT NO.	2421
REVISION DATES	

WALL SECTIONS

S H E E T

A5.3

COPYRIGHT 2026
THESE DRAWINGS AND SPECIFICATIONS ARE THE EXCLUSIVE PROPERTY OF HIGHT JACKSON ASSOCIATES PA. USE OR REPRODUCTION IS PROHIBITED WITHOUT WRITTEN CONSENT

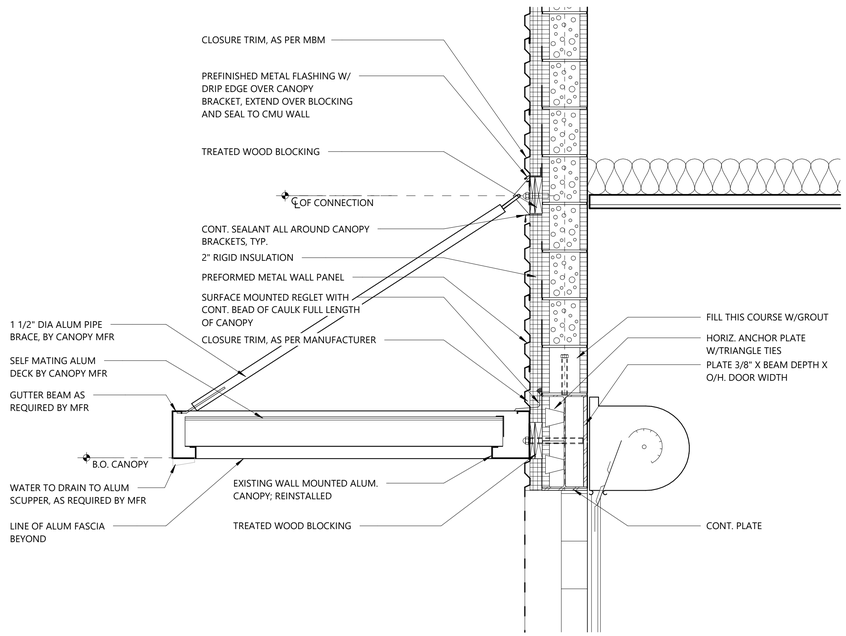

G5 Enlarged Detail
1" = 1'-0" Ref: A6/ A5.3

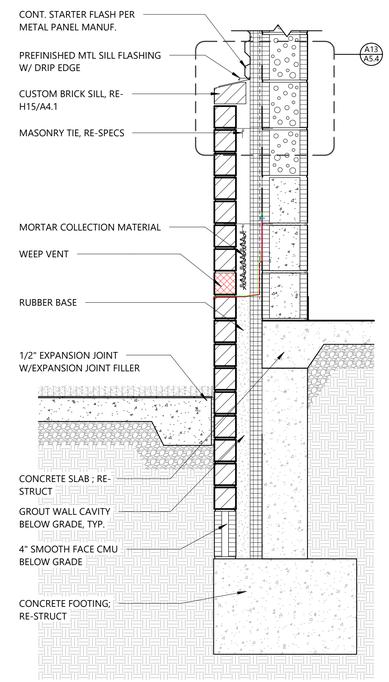

G10 Enlarged Detail
1" = 1'-0" Ref: A2/ A5.2

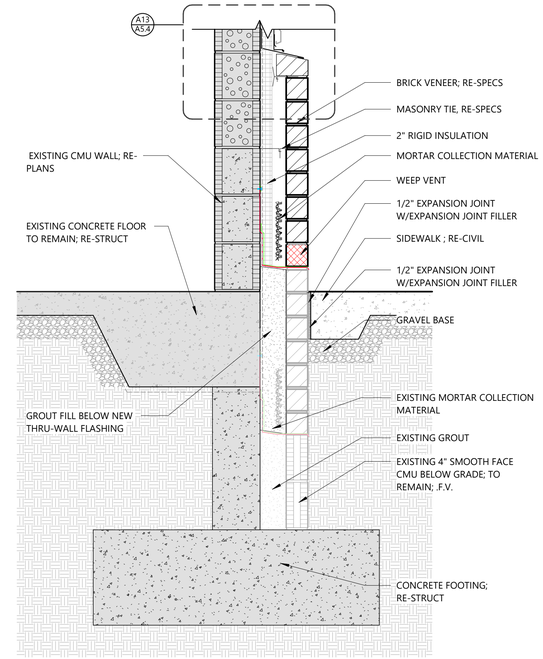

G13 Enlarged Detail
1" = 1'-0" Ref: J10/ A1.0

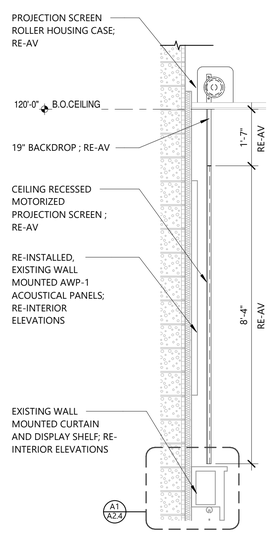

A7 Projector Screen Section
1/2" = 1'-0" Ref: A2/ A7.1

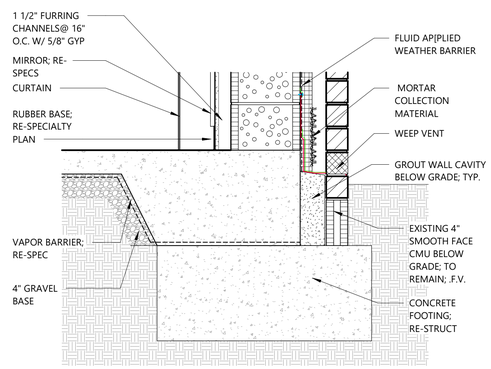

D10 Enlarged Detail
1" = 1'-0" Ref: A13/ A5.2

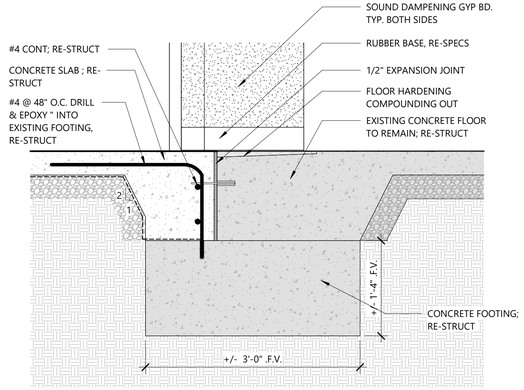

D13 Enlarged Detail
1" = 1'-0" Ref: A14/ A5.3

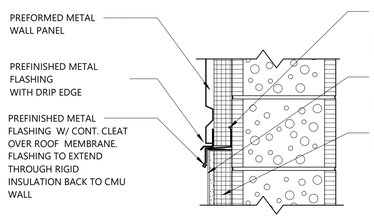

A10 Enlarged Detail
1 1/2" = 1'-0" Ref: F1/ A5.3

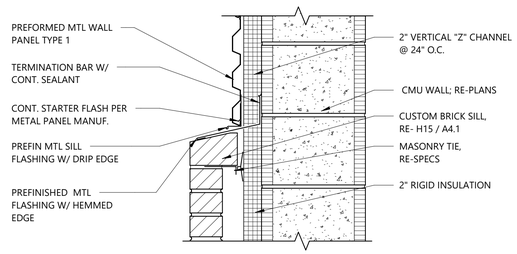

A13 Enlarged Detail
1 1/2" = 1'-0" Ref: J2/ A1.0

HIGHT JACKSON ASSOCIATES, P.A. REGISTERED ARCHITECTS Certificate C 349 ARKANSAS

REGISTERED ARCHITECT TIMOTHY L. SCHMIDT LICENSE NO. 9400 STATE OF ARKANSAS

Hight Jackson ASSOCIATES
5201 W Village Parkway, Suite 300 | Rogers, Arkansas 72758 | (479) 464-4965 | www.hjarch.com

An Additon for BWHS
BWHS Band Addition
1351Gamble Rd, Centerton, AR 72719

DRAWN BY. MS
CHECK BY. TS
ISSUE DATE 04/06/2026
PROJECT NO. 2421
REVISION DATES

WALL DETAILS
S H E E T
A5.4

COPYRIGHT 2026
THESE DRAWINGS AND SPECIFICATIONS ARE THE EXCLUSIVE PROPERTY OF HIGHT JACKSON ASSOCIATES PA. USE OR REPRODUCTION IS PROHIBITED WITHOUT WRITTEN CONSENT.

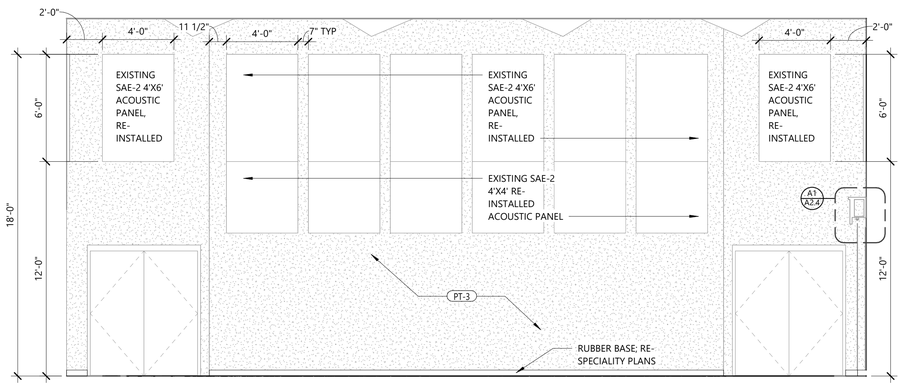

J2 Interior Elevation - North
1/4" = 1'-0" Ref: A5/ A2.3

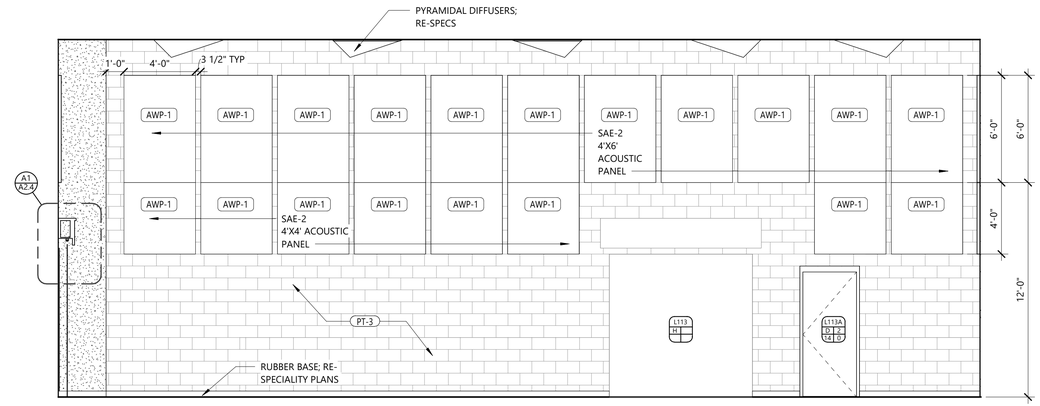

J8 Interior Elevation - South
1/4" = 1'-0" Ref: A5/ A2.3

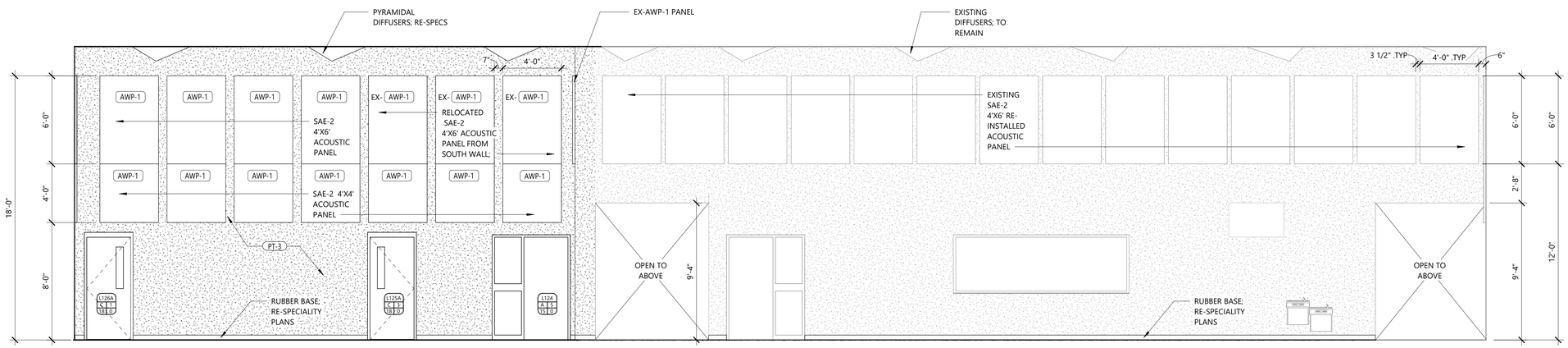

E2 Interior Elevation - West
1/4" = 1'-0" Ref: A5/ A2.3

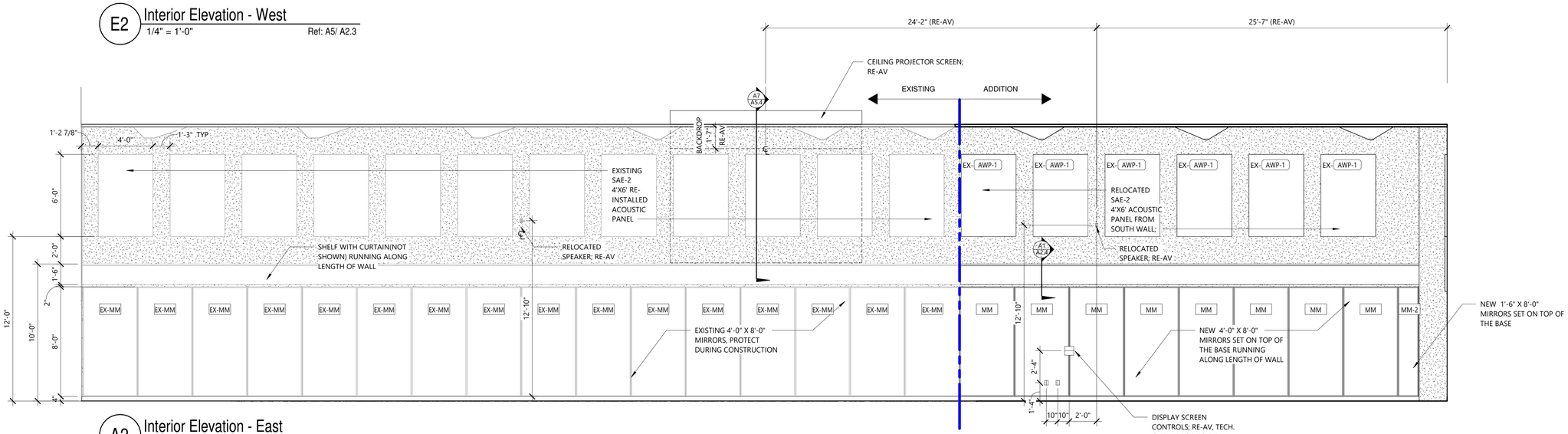

A2 Interior Elevation - East
1/4" = 1'-0" Ref: A5/ A2.3

HIGHT JACKSON ASSOCIATES, P.A. REGISTERED ARCHITECTS Certificate C 349 ARKANSAS

REGISTERED ARCHITECT TIMOTHY L. SCHMIDT LICENSE NO. 9400 STATE OF ARKANSAS

Hight Jackson ASSOCIATES
5201 W Village Parkway, Suite 300 | Rogers, Arkansas 72758 | (479) 464-4965 | www.hjarch.com

An Addition for BWHS
BWHS Band Addition
1351 Gamble Rd, Centerton, AR 72719

DRAWN BY: MS
CHECK BY: TS
ISSUE DATE: 04/06/2026
PROJECT NO. 2421
REVISION DATES

INTERIOR ELEVATIONS

SHEET
A7.1

COPYRIGHT 2026
THESE DRAWINGS AND SPECIFICATIONS ARE THE EXCLUSIVE PROPERTY OF HIGHT JACKSON ASSOCIATES PA. USE OR REPRODUCTION IS PROHIBITED WITHOUT WRITTEN CONSENT

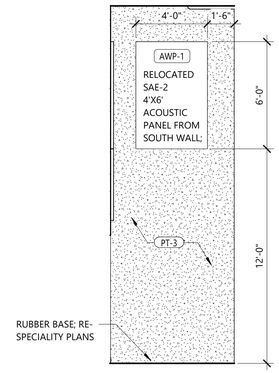

J14 Interior Elevation
1/4" = 1'-0" Ref: A5/ A2.3

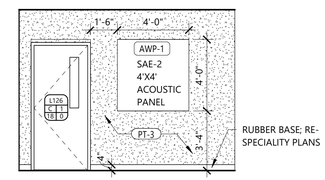

F11 Interior Elevation
1/4" = 1'-0" Ref: A1/ A2.3

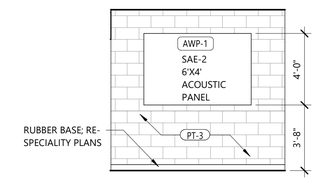

F14 Interior Elevation
1/4" = 1'-0" Ref: A1/ A2.3

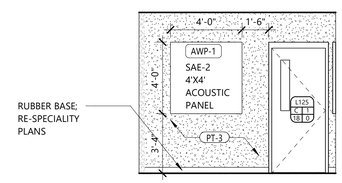

D11 Interior Elevation
1/4" = 1'-0" Ref: A1/ A2.3

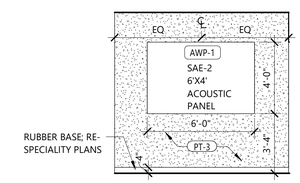

D14 Interior Elevation - L125 North
1/4" = 1'-0" Ref: A1/ A2.3

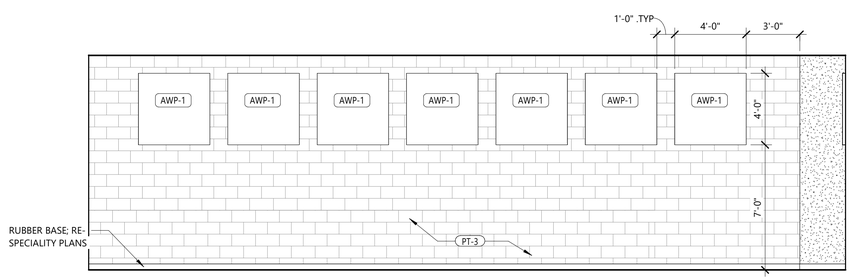

A3 Interior Elevation - L123 South
1/4" = 1'-0" Ref: A5/ A2.3

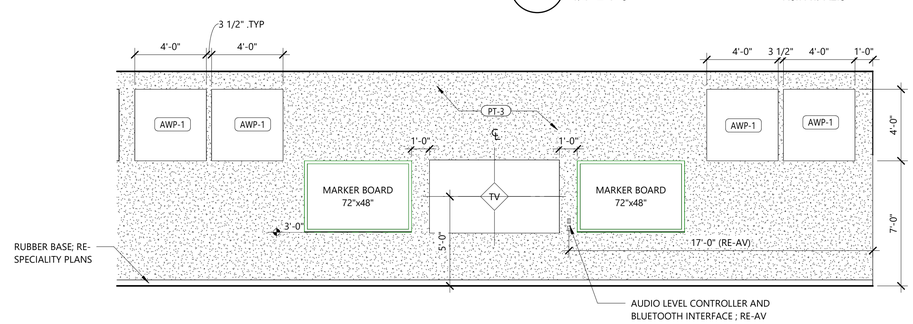

A9 Interior Elevation - L123 North
1/4" = 1'-0" Ref: A5/ A2.3

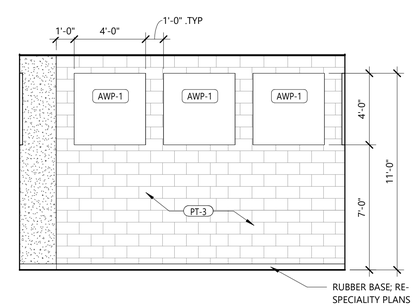

A14 Interior Elevation - L123 West
1/4" = 1'-0" Ref: A5/ A2.3

HIGHT JACKSON ASSOCIATES, P.A.
REGISTERED ARCHITECTS
Certificate C 349
ARKANSAS

REGISTERED ARCHITECT
TIMOTHY L. SCHMIDT
LICENSE NO. 9400
STATE OF ARKANSAS

Hight Jackson ASSOCIATES
5201 W Village Parkway, Suite 300 | Rogers, Arkansas 72758 | (479) 464-4965 | www.hjarch.com

An Addition for BWHS
BWHS Band Addition
1351 Gamble Rd, Centerton, AR 72719

DRAWN BY.
MS
CHECK BY.
TS
ISSUE DATE
04/06/2026
PROJECT NO.
2421
REVISION DATES

INTERIOR ELEVATIONS

S H E E T
A7.2

COPYRIGHT 2026
THESE DRAWINGS AND SPECIFICATIONS ARE THE EXCLUSIVE PROPERTY OF HIGHT JACKSON ASSOCIATES, PA. USE OR REPRODUCTION IS PROHIBITED WITHOUT WRITTEN CONSENT

SPECIAL INSPECTIONS

1. Special Inspections shall be performed in accordance with Section 1705 of 2021 IBC. An independent testing agency shall be employed to provide Special Inspections during construction on the types of work listed under Section 1705. The following areas of work require Special Inspections in accordance with 2021 IBC.
2. Refer to project specification for additional quality control/quality assurance requirements.
3. Construction Manager/Contractor shall coordinate any additional Special Inspection requirements with the Owner and applicable building authorities.
4. **Special Inspections are not the responsibility of the Structural Engineer of Record.**
5. **Special Inspections shall be paid for directly by the Construction Manager.**
6. **Copies of all Special Inspections Reports shall be emailed to the SEOR Andrew Deschenes, P.E., (asd@tswstructural.com) or their designate within seven (7) calendar days of completing the individual inspection(s).**

STRUCTURAL STEEL

(IBC 1705.2.1, 1705.13.1 & 1705.14.1)

PRIOR TO WELDING (TABLE N5.4-1, AISC 360-16; TABLE J6-1, AISC 341-16)

Verification & Inspection	Continuous	Periodic	Detailed Instructions
Verify welding procedures (WPS) and manufacturer certifications for welding consumable available	X	-----	-----
Verify type and grade of material.	-----	X	For components of seismic force resisting system, perform on a random, daily basis per AISC 341-16 Section J5.1.
Welder identification	-----	X	A system shall be maintained by which a welder who has welded a joint or member can be identified. For components of seismic force resisting system, perform on a random, daily basis per AISC 341-16 Section J5.1.
Fit-up groove welds	-----	X	Verify joint preparation, dimensions, cleanliness, tacking, and backing. For components of seismic force resisting system, perform on a random, daily basis per AISC 341-16 Section J5.1.
Access holes	-----	X	Verify configuration and finish. For components of seismic force resisting system, perform on a random, daily basis per AISC 341-16 Section J5.1.
Fit-up of fillet welds	-----	X	Verify dimensions, cleanliness, and tacking. For components of seismic force resisting system, perform on a random, daily basis per AISC 341-16 Section J5.1.
Check welding equipment	-----	X	-----
Welder qualification records and continuity records	-----	X	-----

DURING WELDING (TABLE N5.4-2, AISC 360-16; TABLE J6-2, AISC 341-16)

Verification & Inspection	Continuous	Periodic	Detailed Instructions
Use of qualified welders	-----	X	Verify that welders are appropriately qualified. For components of seismic force resisting system, perform on a random, daily basis per AISC 341-16 Section J5.1.
Control and handling of welding consumables	-----	X	Verify packaging and exposure control. For components of seismic force resisting system, perform on a random, daily basis per AISC 341-16 Section J5.1.
Cracked tack welds	-----	X	Verify welding does not occur over cracked tack welds. For components of seismic force resisting system, perform on a random, daily basis per AISC 341-16 Section J5.1.
Environmental conditions	-----	X	Verify wind speed within limits, precipitation and temperature. For components of seismic force resisting system, perform on a random, daily basis per AISC 341-16 Section J5.1.
WPS followed	-----	X	Verify settings on welding equipment, travel speed, welding materials, shielding gas type/flow rate, preheat applied, interpass temperature maintained, and proper position. For components of seismic force resisting system, perform on a random, daily basis per AISC 341-16 Section J5.1.
Welding techniques	-----	X	Verify interpass and final cleaning, each pass within profile limitations, and quality of each pass. For components of seismic force resisting system, perform on a random, daily basis per AISC 341-16 Section J5.1.
Steel headed stud anchors	-----	X	Verify placement and installation.

AFTER WELDING (TABLE N5.4-3, AISC 360-16; TABLE J6-3, AISC 341-16)

Verification & Inspection	Continuous	Periodic	Detailed Instructions
Welds cleaned	-----	X	Verify welds properly cleaned. For components of seismic force resisting system, perform on a random, daily basis per AISC 341-16 Section J5.1.
Size, length, and location of welds	X	-----	-----
Welds meet visual acceptance criteria	X	-----	Verify crack prohibition, weld/base metal fusion, crater cross section, weld profiles, weld size, undercut, and porosity meet visual acceptance criteria.
Arc strikes	X	-----	-----
k-area	X	-----	-----
Backing & weld tabs removed and finished, and fillet welds added (if required)	X	-----	-----
Repair activities	X	-----	-----
Document acceptance or rejection of welded joint/member	X	-----	-----
Placement of reinforcing or contouring fillet welds	X	-----	Only required in components of seismic force resisting system.
Weld access holes	-----	X	After rolled heavy shapes are welded, visually inspect the weld access hole for cracks.
Prohibited welds	X	-----	Verify no prohibited welds have been added without approval of the EOR.

OTHER STEEL INSPECTIONS (SECTION N5.7 & N5.8, AISC 360-16; TABLES J8-1 & J10-1, AISC 341-16)

Verification & Inspection	Continuous	Periodic	Detailed Instructions
Structural steel details (fabricated steel or steel frames)	N/A	N/A	Verify compliance with the details in construction documents in items including: braces, stiffeners, member locations, and proper application of joint details at each connection. For components of seismic force resisting system, perform on a random, daily basis per AISC 341-16 Section J5.1.
Anchor rods and other embedments supporting structural steel	N/A	N/A	Verify compliance with construction documents. Verify diameter, grade, type, length of anchor rod or embedded item, and extent or depth of embedment prior to placement of concrete. For components of seismic force resisting system, perform on a random, daily basis per AISC 341-16 Section J5.1.
Reduced beam sections (RBS)	N/A	N/A	For seismic force resisting system components: Verify contour and finish as well as dimensional tolerances.
Protected zones	N/A	N/A	For seismic force resisting system components: Verify that no holes or unapproved attachments are made within the protected zone.
H-piles	N/A	N/A	For seismic force resisting system components: Verify that no holes or unapproved attachments occur within the protected zones of piling.
Galvanized structural steel	-----	X	Verify exposed cut surfaces of galvanized structural steel main members and exposed corners of rectangular HSS have no cracks subsequent to galvanizing.

STRUCTURAL STEEL (CONT.)

(IBC 1705.2.1, 1705.13.1, & 1705.14.1)

PRIOR TO BOLTING (TABLE N5.6-1, AISC 360-16; TABLE J7-1, AISC 341-16)

Verification & Inspection	Continuous	Periodic	Detailed Instructions
Manufacturer's certifications	X	-----	Verify certifications available for fastener materials.
Fasteners marked	-----	X	Verify marked in accordance with ASTM requirements. For components of seismic force resisting system, perform on a random, daily basis per AISC 341-16 Section J5.1.
Fastener selection	-----	X	Verify proper selection for joint detail including grade, type, and bolt length if threads excluded from shear plane. For components of seismic force resisting system, perform on a random, daily basis per AISC 341-16 Section J5.1.
Bolting procedure	-----	X	Verify proper bolting procedure selected for joint detail. For components of seismic force resisting system, perform on a random, daily basis per AISC 341-16 Section J5.1.
Connecting surfaces	-----	X	Verify connecting elements, including the appropriate faying surface condition and hole preparation, if specified, meet applicable requirements. For components of seismic force resisting system, perform on a random, daily basis per AISC 341-16 Section J5.1.
Pre-installation verification testing by installation personnel	X	-----	Observe and document for fastener assemblies and methods used.
Fastener storage	-----	X	Verify proper storage provided for bolts, nuts, washers, and other fastener components. For components of seismic force resisting system, perform on a random, daily basis per AISC 341-16 Section J5.1.

DURING BOLTING (TABLE N5.6-2, AISC 360-16; TABLE J7-2, AISC 341-16)

Verification & Inspection	Continuous	Periodic	Detailed Instructions
Position of fasteners	-----	X	Verify fastener assemblies, of suitable condition, are placed in all holes and washers, if required, are positioned as required. For components of seismic force resisting system, perform on a random, daily basis per AISC 341-16 Section J5.1.
Joint brought into snug-tight condition prior to the pretensioning operation	-----	X	For components of seismic force resisting system, perform on a random, daily basis per AISC 341-16 Section J5.1.
Fastener components not turned by the wrench are prevented from rotating	-----	X	For components of seismic force resisting system, perform on a random, daily basis per AISC 341-16 Section J5.1.
Pretensioning of fasteners	-----	X	Fasteners are pretensioned in accordance with the RCSC specification, progressing systematically from the most rigid point toward the free edges. For components of seismic force resisting system, perform on a random, daily basis per AISC 341-16 Section J5.1.

AFTER BOLTING (TABLE N5.6-3, AISC 360-16; TABLE J7-3, AISC 341-16)

Verification & Inspection	Continuous	Periodic	Detailed Instructions
Document acceptance or rejection of bolted connections	X	-----	-----

STEEL CONSTRUCTION OTHER THAN STRUCTURAL STEEL

(IBC 1705.2)

STEEL ROOF AND FLOOR DECKS (IBC TABLE 1705.2.2/SDI QA/QC 6.1)

Verification & Inspection	Continuous	Periodic	Detailed Instructions
Material verification of cold-formed steel deck	-----	X	Verify deck materials are represented by appropriate mill certifications.
Floor and roof deck welding	-----	X	Verify weld meets acceptance criteria of AWS D.3. Verify welder qualifications.
Floor and deck mechanical fasteners	-----	X	Verify fastener installation in accordance with SDI.
Deck installation	-----	X	Verify deck installation in accordance with applicable drawings and documents.

OPEN-WEB STEEL JOISTS AND JOIST GIRDERS (IBC TABLE 1705.2.3):

Verification & Inspection	Continuous	Periodic	Detailed Instructions
End connections - welding or bolted	-----	X	Verify installation compliance with SJI specifications listed in IBC 2207.1.
Bridging - horizontal or diagonal	-----	X	Verify installation compliance with SJI specifications listed in IBC 2207.1 as applicable.

CONCRETE CONSTRUCTION

(IBC 1705.3; TABLES J9-2 & J9-3, AISC 341-16)

Verification & Inspection	Continuous	Periodic	Detailed Instructions
Reinforcing steel	-----	X	Verify, prior to placing concrete, reinforcing is of specified type, grade and size; free of oil, dirt and rust; located and spaced properly; hooks, bends, ties, stirrups and supplemental reinforcement placed correctly; lap lengths, stagger and offsets provided; and all mechanical connections installed per the manufacturer's instructions and/or evaluation report.
Cast-in anchors	-----	X	Verify anchor installation complies with ACI 318: 17.8.2.
Post-installed anchors	-----	X	All post-installed anchors shall be specially inspected as required by the approved ICC-ES report. Anchors installed horizontally or in upwardly inclined orientations to resist tension loads require continuous inspection per ACI 318:17.8.2.4. Verify all other mechanical and adhesive anchors comply with ACI 318: 17.8.2.
Use of required mix design	-----	X	Verify mixes comply with the approved construction documents; ACI 318: Ch. 19, 26.4.3, 26.4.4 and IBC 1904.1, 1904.2.
Concrete sampling for strength tests, slump, air content, and temperature	X	-----	Verify sampling in accordance with ASTM C172 and ASTM C31. See ACI 318: 26.12 for evaluation and acceptance of concrete. See ACI 318: 26.5 for mixing requirements of concrete.
Concrete & shotcrete placement	X	-----	Verify proper application techniques. See ACI 318: 26.5.
Curing temperature and techniques	-----	X	Verify concrete surface temperature (other than high-early-strength) is kept >50°F in moist condition for at least 7 days after placement unless accelerated curing is used. High-early-strength concrete shall be kept >50°F in moist condition for at least 3 days unless accelerated curing is used. Verify compliance with cold weather requirements in ACI 318: 26.5.4 or hot weather requirements in ACI 318: 26.5.5, whichever is applicable.
Pre-stressed concrete	N/A	N/A	Verify application of prestressing force and grouting of bonded prestressing tendons in accordance with ACI 318: 26.10.
Erection of precast concrete	N/A	N/A	Verify all precast elements are lifted, assembled and braced in accordance with the approved construction documents. See ACI 318: 26.9.
Strength verification	-----	X	Verify adequate strength has been achieved prior to the removal of shores and forms or the stressing of post-tensioned tendons. See ACI 318: 26.11.2.
Formwork	-----	X	Verify forms are placed plumb and conform to the shapes, lines, and dimensions of the members as required by the approved construction documents. See ACI 318: 26.11.1.2.
Limits on water added at the truck or pump	-----	X	Verify during concrete placement. Applicable to composite construction in seismic force resisting system components. Perform on a random daily basis per AISC 341-16 Section J5.1. See Table J9-2, AISC 341-16.
Proper placement techniques to limit segregation	-----	X	Verify during concrete placement. Applicable to composite construction in seismic force resisting system components. Perform on a random daily basis per AISC 341-16 Section J5.1. See Table J9-2, AISC 341-16.
Verify installation of the embedded parts, completion of the continuity of reinforcement across joints, and completion of connections in the field	X	-----	For precast concrete diaphragm connections or reinforcement at joints classified as moderate or high deformability elements (MDE or HDE) in structures assigned to seismic design category C, D, E, or F. See ACI 318:26.13.1.3 and ACI 550.5.
Verify installation tolerances of precast concrete diaphragm connections	N/A	N/A	See ACI 550.5 for compliance.

INSPECTION OF FABRICATORS

(IBC 1704.2)

Verification & Inspection	Continuous	Periodic	Detailed Instructions
Verify fabricator maintains detailed fabrication and quality control procedures	-----	X	See IBC 1704.2.5.1.
Submittal of certificate of compliance	-----	X	Where work is done on premises of "Approved" fabricator. Fabricator shall submit a Certificate of Compliance to the building official stating work was performed in accordance with the approved construction documents. See IBC 1704.2.5.1.

SOILS CONSTRUCTION

(IBC 1705.6)

Verification & Inspection	Continuous	Periodic	Detailed Instructions
Verify subgrade is adequate to achieve design bearing capacity	-----	X	Prior to placement of concrete; per Geotechnical Report.
Verify excavations extend to proper depth and material	-----	X	Prior to placement of compacted fill or concrete; per Geotechnical Report
Verify subgrade has been appropriately prepared prior to placing compacted fill	-----	X	Prior to placement of compacted fill; per Geotechnical Report
Perform classification and testing of compacted fill materials	-----	X	All materials shall be checked at each lift for proper classifications and gradations not less than once for each 10,000 sq ft. of surface area unless otherwise noted; per Geotechnical Report
Verify proper materials, densities and lift thicknesses	X	-----	During placement and compaction on compacted fill; per Geotechnical Report

MASONRY CONSTRUCTION

(IBC 1705.4)

PRIOR TO CONSTRUCTION (ARTICLE 1.5, TMS 602-16)

Verification & Inspection	Continuous	Periodic	Detailed Instructions
Review material certificates, mix designs, test results and construction procedures	-----	X	Verify materials conform to requirements of approved construction documents. Mix design, test results, material certificates, and construction procedures submitted for review. Mortar mix designs conform to ASTM C 270; grout conforms to ASTM C 476. Material certificates provided for: reinforcement; anchors, ties, fasteners, and metal accessories; masonry units; mortar and grout materials. Construction procedures for cold-weather or hot-weather construction reviewed. Qualification of field testing personnel, and special inspector reviewed.

AS CONSTRUCTION BEGINS (TABLE 4, TMS 602-16)

Verification & Inspection	Continuous	Periodic	Detailed Instructions
Proportions of site-prepared mortar	-----	X	Verify mortar is type and color specified on construction documents, conforms to ASTM C 270, and is mixed in accordance with Article 2.6 A and Article 2.6 C of TMS 602-16.
Grade, type, and size of reinforcement, connectors, and anchor bolts	-----	X	Verify reinforcement is placed in accordance with Article 3.4 of TMS-602-16. Prestressing tendons placed per Article 3.6 A.
Sample panel construction	-----	X	Verify sample panel complies with Article 1.6 D of TMS-602-16.

DURING MASONRY CONSTRUCTION (TABLE 4, TMS 602-16)

Verification & Inspection	Continuous	Periodic	Detailed Instructions
Size and location of structural elements	-----	X	Verify locations of structural elements comply with approved plans. Confirm tolerances meet the requirements of Article 3.3 F of TMS 602-16.
Type, size, and location of anchors, including other details of anchorage of masonry to structural members, frames, or other construction.	-----	X	Verify anchorages and connections are provided per approved plans, Section 1.2.1(e), 6.1.4.3, and 6.2.1 of TMS 402-16. Continuous inspection required for Risk Category IV buildings.
Welding of reinforcement	N/A	N/A	Verify welded splice has bars butted and welded to develop at least 125% of yield strength of bar in tension or compression. See Section 6.1.6.1.2 of TMS 402-16.
Preparation, construction, and protection of masonry during cold weather (<40°F) or hot weather (>90°F).	-----	X	Verify cold-weather construction performed in accordance with Article 1.8 C of TMS 602-16 and hot weather construction per Article 1.8 D of TMS 602-16.
Observation of preparation of grout specimens, mortar specimens, and/or prisms	-----	X	Confirm specimen/prism preparation performed as required by Article 1.4 of TMS 602-16. Continuous inspection is required for Risk Category IV buildings.
Placement of masonry unit and construction of mortar joints	-----	X	Verify placement in accordance with Article 3.3 B of TMS 602-16.
Materials and procedures with the approved submittals	-----	X	Verify materials and procedures conform to approved submittals. See Article 1.5 of TMS 602-16.

PRIOR TO GROUTING (TABLE 4, TMS 602-16)

Verification & Inspection	Continuous	Periodic	Detailed Instructions
Grout space	-----	X	Verify grout space is free of mortar droppings, debris, loose aggregate, and other deleterious materials and cleanouts are provided per Article 3.2 D and 3.2 F of TMS-602-16. Continuous inspection is required for Risk Category IV buildings.
Placement of reinforcement, connectors, and anchor bolts	-----	X	Verify reinforcement, joint reinforcement, wall ties, anchor bolts and veneer anchors are installed in accordance with the approved construction documents, Section 6.1, 6.3.1, 6.3.6, and 6.3.7 of TMS 402-16, and Articles 3.2 E, and 3.4 of TMS 602-16. Continuous inspection is required for Risk Category IV buildings.
Proportions of site-prepared grout	-----	X	Verify grout is proportioned per ASTM C 476 and has a slump between 8-11 inches. Self-consolidated grout shall not be proportioned onsite. See Article 2.6 B of TMS 602-16.

MINIMUM TESTING (TABLE 3, TMS 602-16)

Verification & Inspection	Continuous	Periodic	Detailed Instructions
Verification of slump flow and Visual Stability Index (VSI) for self-consolidating grout	-----	X	Compressive strength tests should be performed in accordance with ASTM C 1019; slump flow and VSI performed in accordance with ASTM C 1611.
Verification of f'm and f'AAC	-----	X	Determine compressive strength for each wythe by "unit strength method" or by the "prism test method" as specified in Article 1.4 B of TMS 602-16 prior to construction. For Risk Category IV buildings this should be verified at every 5,000 sq. ft. of construction.
Verification of proportions of materials in grout and premixed or preblended mortar	-----	X	Verify that proportions for mortar meet ASTM C 270 and proportions for grout meet ASTM C 476. This applies to Risk Category IV buildings only.

STATE OF ARKANSAS
REGISTERED PROFESSIONAL ENGINEER
ANDREW S. DESCHENES
No. 22909
04.06.2026

CERTIFICATE OF AUTHORIZATION
Tatum Smith Welcher Engineers, Inc.
No. 218

Hight Jackson ASSOCIATES
5201 W Village Parkway, Suite 300 | Rogers, Arkansas 72758 | (479) 464-4955 | www.hjarch.com

An Addition for BWHS
BWHS Band Addition
1351Gamble Rd, Centerton, AR 72719

DRAWN BY: TMW
CHECK BY: ASD
ISSUE DATE: 04/06/2026
PROJECT NO.: 2421
REVISION DATES

REQUIRED IBC SPECIAL INSPECTIONS

SHEET
S1.0

TATUM SMITH WELCHER
STRUCTURAL ENGINEERS
(479) 621-6128 ROGERS, ARKANSAS
TSW #: 26004 PM: ASD DE: BWA

COPYRIGHT 2026
THESE DRAWINGS AND SPECIFICATIONS ARE THE EXCLUSIVE PROPERTY OF HIGHT JACKSON ASSOCIATES PA. USE OR REPRODUCTION IS PROHIBITED WITHOUT WRITTEN CONSENT.

4/6/2026 8:49:13 AM
C:\Users\asd\Documents\26004 - BWHS Arts & Athletics Addition - Band - Bentonville_AR_STRUCT_R25_ASDMTWR7.rvt

CONSTRUCTION SAFETY GENERAL NOTE

THE STRUCTURAL ENGINEER SHALL NOT BE RESPONSIBLE FOR CONSTRUCTION MEANS, METHODS, TECHNIQUES, SEQUENCES OR PROCEDURES, TEMPORARY SHORING/BRACING, OR FOR SAFETY PRECAUTIONS AND PROGRAMS, SINCE THESE ARE SOLELY THE CONTRACTOR'S RESPONSIBILITY.

Concrete General Notes 3100:

1. All detailing, fabrication and placing of reinforcing steel shall conform to the ACI Standard "Details and Detailing of Concrete Reinforcement" (ACI 315).
2. Concrete at slab-on-grade shall develop a 28-day minimum compressive strength of 3,500 psi. Follow normal mixing time and speed as recommended by ASTM C94.
3. All concrete at footings, pedestals and walls shall typically develop a 28-day minimum compressive strength of 3,000 psi.
4. All concrete for footings, walls and slab-on-grade shall have a 5" maximum slump.
5. All reinforcing steel shall be deformed bars conforming to ASTM A615, Grade 60.
6. All reinforcing bar splices shall be 44 bar diameters for #6 and smaller diameter bars. Reinforcing bar splices shall be 48 bar diameters for #7 and larger bar diameters.
7. All reinforcing bar hooks shall be ACI standard 90 degree hook, unless noted otherwise.
8. Provide two #4 x 4'-0" long diagonal bars centered in slab, at all re-entrant corners and any other locations designated on the plans.
9. Provide corner bars in footings, concrete stemwall and turn-down slab same size and spacing as longitudinal reinforcing.
10. Provide (1) #4 hoop with 8" lap in slab-on-grade around floor drains, columns and all slab penetrations 3" in diameter or greater. Also install around electrical conduit groupings 3" in diameter or greater.
11. Limit the width of conduit groups to 3'-0" as they pass under wall footings. As much as possible, align the conduit perpendicular to the footing as it passes under the footing. Provide a minimum spacing of 2'-0" between conduit groups as the conduit passes under a footing. **Do not extend conduits under column footings or spread footings**.
12. Plate dowel system shall be Diamond Dowel System by PNA Construction Technologies, the Speed Plate System by SIKA Corp. or approved equal. Install plate dowels at slab construction joints at 18" o.c.
13. Welded wire fabric shall conform to ASTM A1064. Provide mesh in flat sheets.
14. Wire fabric reinforcing shall lap 6" and be securely wired at each side and end.
15. Smooth dowels shall be steel conforming to ASTM A36.
16. All slots, sleeves and other embedded items shall be set before concrete is placed. See Architectural, Electrical, Mechanical, and Vendor's drawings for size and locations.
17. Bar supports at footings and slabs-on-grade shall be factory made wire bar supports, type "SBU" linear supports.
18. Epoxy for doweling reinforcement shall be HY-200 by Hilti, AT 3G by Simpson Strong-Tie or AC200+ by Dewalt, unless noted otherwise.
19. Maximum net allowable bearing pressure = 1,500 psf for continuous footings and 1,800 psf for isolated spread footings. Footings shall bear on natural, stiff to very stiff, sandy clean clay and sandy clay soils as described in the Soils Report No. A25186.00135.000 dated January 26th, 2026.
20. Use of compacted, free-draining pea gravel, crushed stone, or coarse sand underneath the building slab is recommended by TSW, Inc. Consult Geotechnical Engineer regarding potential substitution of free-draining coarse materials with approved subgrade. Slabs-On-Grade have been designed for a modulus of subgrade reaction (k-value) of 100 psi/in.

NOTE:
EXPANSIVE CLAYS, LOW-STRENGTH SOILS, SOFT SOILS AND SOILS WITH ORGANIC MATERIAL ARE NOT SUITABLE IN SUPPORTING THE SLAB AND FOUNDATIONS. IF CONTRACTOR DISCOVERS UNSTABLE MATERIAL DURING EARTHWORK, A GEOTECHNICAL ENGINEER SHALL BE CONSULTED IN ORDER TO ARRIVE AT A SOLUTION THAT WILL NOT COMPROMISE THE STRUCTURAL INTEGRITY OF THE SLAB AND FOUNDATIONS.

Concrete Masonry General Notes 4100:

1. All concrete masonry units shall be lightweight above finished floor and normal weight below grade. All hollow concrete masonry units shall conform to ASTM C90, Grade N, Type 1 with a minimum ultimate compressive prism strength (f'm) of 2,000 psi for the masonry assemblage. All concrete masonry shall be laid in Running (Common) Bond.
2. Mortar at exterior walls, all load-bearing walls, walls below grade and non-load-bearing walls higher than 20'-0" shall be Type S mortar and have a minimum compressive strength of 1,800 psi. Mortar at interior non-load-bearing walls not higher than 20'-0" and mortar at masonry veneer shall be Type N mortar and have a minimum compressive strength of 750 psi. All mortar shall conform to ASTM C270. **Masonry cement shall not be used for mortar**.
3. All grout shall be ready-mix concrete, with 3/8" diameter max. aggregate, have a minimum 28-day compressive strength of 2,000 psi and a design slump between 8" to 10" or preblended product (Core Fill Grout, Coarse CF-02, by Spec Mix) with a minimum 28-day compressive strength of 2,000 psi and a design slump between 8" to 10".
4. All 12" CMU bond beam units shall be reinforced with two bars and all 8" CMU bond beam units shall be reinforced with one bar. See Masonry Wall Reinforcement Schedule on Drawing S3.0 for size of bars for vertical wall reinforcement and bond beam requirements. Provide corner bars and lap bond beam reinforcing 48 bar diameters.
5. All reinforcing steel shall be deformed bars conforming to ASTM A615, Grade 60.
6. All bolts, anchors, reinforcement and embedded items shall be grouted in place.
7. All reinforcing bar splices shall be 48 bar diameters, U.N.O.
8. At all 8" CMU walls except at interior non-load bearing walls, provide (1) vertical bar each cell for the first (2) cells adjacent to control joints in walls, at ends of walls, wall corners and on each side of wall openings, unless noted otherwise. At all 12" CMU walls provide (2) vertical bars (1 each face) in each cell for the first (2) cells adjacent to control joints in walls, at ends of walls, wall corners and on each side of wall openings, unless noted otherwise. Vertical bars shall match reinforcement for remainder of wall. See Masonry Wall Reinforcement Schedule on Drawing S3.0 for size of reinforcement.
9. Provide control joints in brick veneer where shown on Architectural Drawings.
10. Provide control joints in CMU walls where shown on S3.0. Place joints for CMU walls max. 24'-0" o.c.
11. Provide horizontal joint reinforcement at 16" o.c. Reinforcement shall be ladder design, min. 9 gage welded steel wire, hot dipped galvanized to 1.5 oz. width shall be 1 1/2" less than wall thickness.

NOTE:
ARCHITECT MUST APPROVE USE OF CONTROL AND CONSTRUCTION JOINTS BEFORE SLAB CONSTRUCTION BEGINS. TYPICAL SLAB CJ SHALL BE CONSTRUCTION JOINT DETAIL.

NOTE:
COORDINATE EXACT LOCATION AND LIMITS OF POLISHED CONCRETE WITH ARCHITECTURAL DWGS.

NOTE:
PROVIDE DIAMOND DOWEL SYSTEM AS MANUFACTURED BY PNA CONSTRUCTION TECHNOLOGIES OR THE SPEED SYSTEM BY SIKA CORPORATION AT CONSTRUCTION JOINTS IN ALL FLOOR AREAS. COORD. WITH ARCHITECTURE FOR CONSTRUCTION JOINT LOCATIONS.

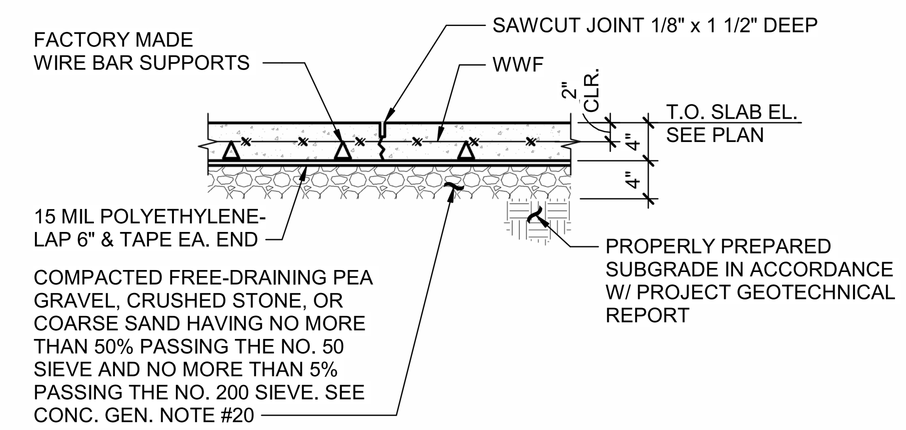

1 TYP. SLAB-ON-GRADE CONTROL JT. DTL. (CJ)
NOT TO SCALE

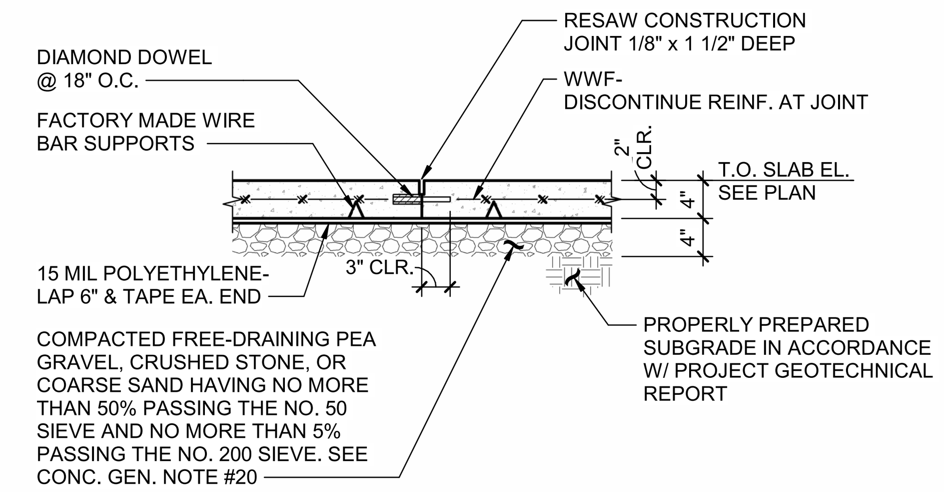

2 TYP. SLAB-ON-GRADE CONSTRUCTION JT. DTL. (CJ)
NOT TO SCALE

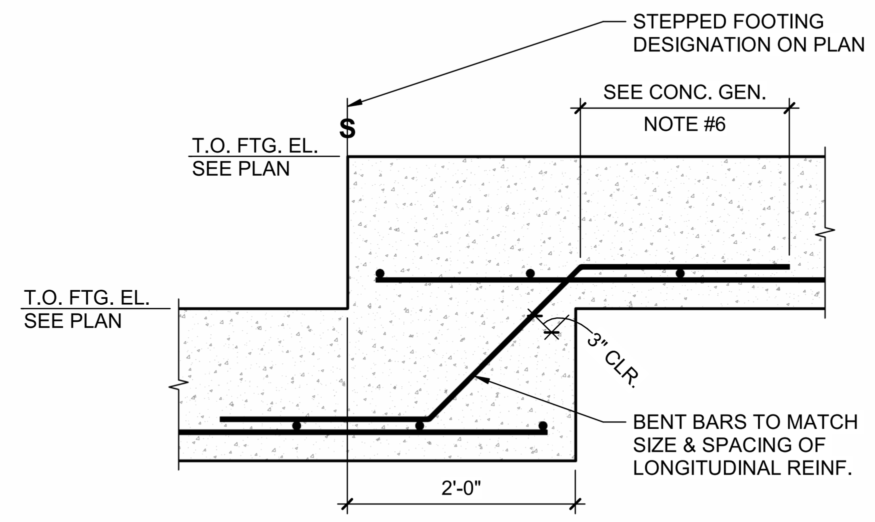

3 TYP. STEPPED FOOTING DETAIL
NOT TO SCALE

NOTE:
LOCATE CONTROL JOINT AT 24'-0" O.C. MAXIMUM. COORDINATE LOCATION OF CONTROL JOINTS IN CONCRETE WALL WITH LOCATION OF CONTROL JOINTS IN VENEER AND CMU WALLS (SEE ARCHITECTURAL DRAWINGS).

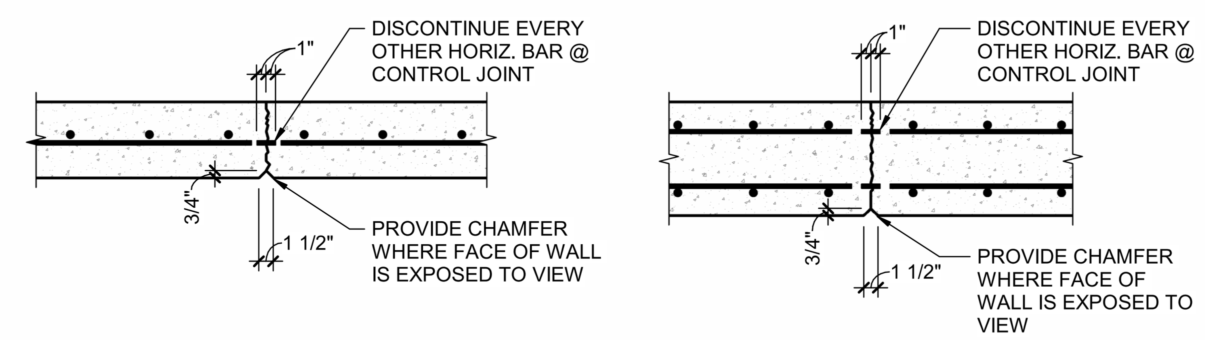

SINGLE LAYER REINF. CONC. WALL

DOUBLE LAYER REINF. CONC. WALL

4 TYP. CONCRETE WALL CONTROL JT. DTL.
NOT TO SCALE

NOTE:
CONSTRUCTION JOINT MAY BE SUBSTITUTED FOR CONTROL JOINT.

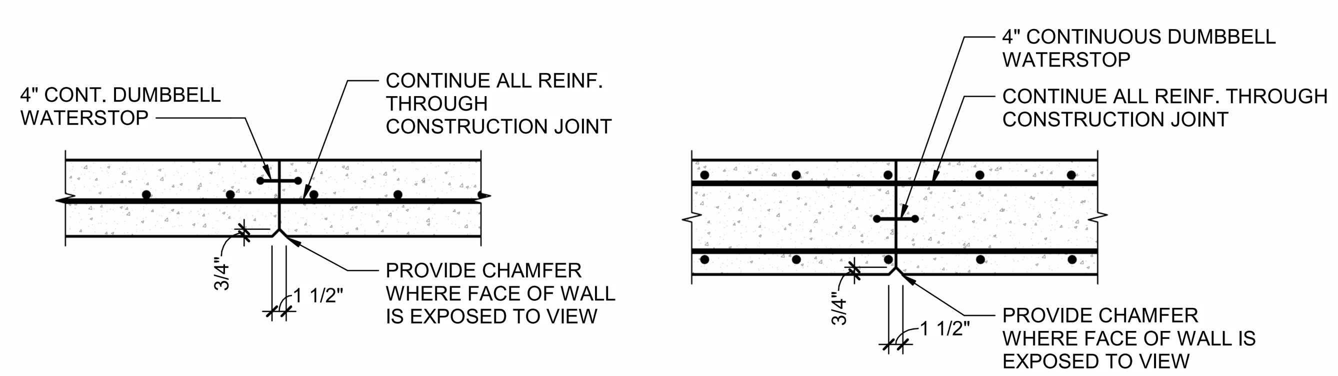

SINGLE LAYER REINF. CONC. WALL

DOUBLE LAYER REINF. CONC. WALL

5 TYP. CONCRETE WALL CONSTRUCTION. JT. DTL.
NOT TO SCALE

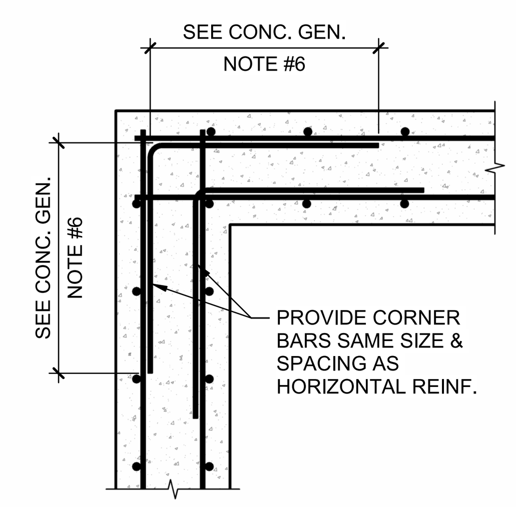

DOUBLE LAYER REINF. CONC. WALL

6 TYP. CONCRETE WALL CORNER DETAILS
NOT TO SCALE

TYPICAL STRUCTURAL ABBREVIATIONS

A.R.	ANCHOR ROD	FDN	FOUNDATION	PED	PEDESTAL
ACI	AMERICAN CONCRETE INSTITUTE	FIN	FINISH	PL	PLATE
AISC	AMERICAN INSTITUTE OF STEEL CONSTRUCTION	FLR	FLOOR	PLF	POUNDS PER FOOT
ARCH	ARCHITECT	FTG	FOOTING	PROJ	PROJECTION
ASTM	AMERICAN SOCIETY FOR TESTING AND MATERIALS	GA	GAUGE	PSF	POUNDS PER SQUARE FOOT
BLDG	BUILDING	GALV	GALVANIZED	PSI	POUNDS PER SQUARE INCH
BM	BEAM	H.S.A.	HEADED STUD ANCHOR	R	RADIUS
BOTT	BOTTOM	HK	HOOK	REINF	REINFORCEMENT
BRG	BEARING	HORIZ	HORIZONTAL	REQ'D	REQUIRED
BTWN	BETWEEN	J.B.E.	JOIST BEARING ELEVATION	RTU	ROOF TOP UNIT
CFS	COLD-FORMED STEEL	JST	JOIST	S.O.G.	SLAB ON GRADE
CL	CENTER LINE	JT	JOINT	SCHED	SCHEDULE
CLR	CLEAR	L	ANGLE	SECT	SECTION
COL.	COLUMN	LDH	LONG DIMENSION HORIZONTAL	SEOR	STRUCTURAL ENGINEER OF RECORD
CONC	CONCRETE	LDV	LONG DIMENSION VERTICAL	SIM	SIMILAR
CONN	CONNECTION	LG	LONG	SJI	STEEL JOIST INSTITUTE
CONT	CONTINUOUS	LLH	LONG LENGTH HORIZONTAL	SPA	SPACING
DEFL.	DEFLECTION	LLV	LONG LENGTH VERTICAL	SPECS	SPECIFICATIONS
DIA, or Ø	DIAMETER	LONG	LONGITUDINAL	STD	STANDARD
DIM	DIMENSION	MAX	MAXIMUM	STIFF	STIFFENER
DN	DOWN	MBM	METAL BUILDING MANUFACTURER	STL	STEEL
do	DITTO	MECH	MECHANICAL	TOC	TOP OF CONCRETE
DTL	DETAIL	MFR	MANUFACTURER	TOF	TOP OF FOOTING
DWG	DRAWING	MIN	MINIMUM	TOS	TOP OF STEEL
E.F.	EACH FACE	MISC	MISCELLANEOUS	TOTB	TOP OF TIE BEAM
E.W.	EACH WAY	MTL	METAL	TOW	TOP OF WALL
EA	EACH	N.S.	NEAR SIDE	TRANS	TRANSVERSE
EL	ELEVATION	O.C.	ON CENTER	TYP	TYPICAL
EQ	EQUAL	O.F.	OUTSIDE FACE	U.N.O.	UNLESS NOTED OTHERWISE
EXIST	EXISTING	OPNG	OPENING	VERT	VERTICAL
EXP	EXPANSION	P.A.F.	POWDERED ACTUATED FASTENER	W/	WITH
F.S.	FAR SIDE			WP	WORK POINT
F.V.	FIELD VERIFY			WWF	WELDED WIRE FABRIC

4/6/2026 8:49:16 AM
C:\Users\asd\Documents\26004 - BWHS Arts & Athletics Addition - Band - Bentonville, AR_STRUCT_R25_ASDMTXR7.rvt

STATE OF ARKANSAS REGISTERED PROFESSIONAL ENGINEER No. 22899 ANDREW S. DESCHENES
04.06.2026

CERTIFICATE OF AUTHORIZATION Tatum Smith Welcher Engineers, Inc. No. 218 ARKANSAS ENGINEER

HightJackson ASSOCIATES
5201 W Village Parkway, Suite 300 | Rogers, Arkansas 72758 | (479) 464-4965 | www.hjarch.com

An Addition for BWHS
BWHS Band Addition
1351Gamble Rd, Centerton, AR 72719

DRAWN BY. TMW
CHECK BY. ASD
ISSUE DATE 04/06/2026
PROJECT NO. 2421
REVISION DATES

TATUM SMITH WELCHER STRUCTURAL ENGINEERS
(479) 621-6128 ROGERS, ARKANSAS
TSW #: 26004 PM: ASD DE: BWA

FOUNDATION GENERAL NOTES & TYP. DETAILS
SHEET
S1.1

COPYRIGHT 2026
THESE DRAWINGS AND SPECIFICATIONS ARE THE EXCLUSIVE PROPERTY OF HIGHT JACKSON ASSOCIATES.PA. USE OR REPRODUCTION IS PROHIBITED WITHOUT WRITTEN CONSENT

Structural Steel General Notes 5100:

1. All detailing, fabrication and erection of structural steel shall conform to the requirements of the AISC Specification for the Design, Fabrication and Erection of Structural Steel for Buildings.
2. Wide flanges and WT tees shall conform to ASTM A992 with a yield strength of 50 ksi.
3. Hollow Structural Section (HSS) shall conform to ASTM A500, Grade C with a yield strength of 50 ksi.
4. Headed stud anchors (H.S.A.'s) shall conform to ASTM A108.
5. All other structural steel shall conform to the requirements of ASTM A36. Angle, plate and beam lintels at exterior wall openings shall be hot-dipped galvanized.
6. All welding shall conform to the Specifications of the American Welding Society. Welding electrodes shall be E-70 low hydrogen series. Welding shall be done by a certified welder.
7. High strength bolts shall typically be 3/4" diameter bolts conforming to ASTM A325. Connections shall be designed as bearing type with threads in shear plane. Holes shall be 1/16" larger than bolt size. See details for connections with 1" diameter bolts.
8. All bolts shall be tightened to a snug-tight condition. A snug tight condition is defined as the tightness attained by a few impacts of an impact wrench or the full effort of a man using an ordinary spud wrench. All connected elements must be brought into snug contact.
9. No openings shall be cut in structural members unless shown on the drawings.
10. Roof frame is non-self-supporting and masonry walls are designed for a completed condition only. Metal roof deck and masonry shear walls are required to provide lateral stability for the frame and resistance to wind and seismic forces. Contractor shall provide all temporary bracing required to maintain stability of structural system.
11. All exposed edges of plates, beams, etc., shall be shop ground smooth and uniform.
12. 1/2"Ø sleeve anchors shall be 1/2"Ø x 4" long HLC-H Sleeve Anchor by Hilti. HLC-H Sleeve Anchor shall be carbon steel with zinc plating & have a 3" embedment depth.
13. 1/2"Ø expansion bolts shall be 1/2"Ø x 5 1/2" long Kwik Bolt 3 by Hilti. Expansion Anchor shall be carbon steel with zinc plating & have a 3 1/2" embedment depth.
14. 3/4"Ø expansion bolts shall be 3/4"Ø x 5 1/2" long Kwik Bolt 3 by Hilti. Expansion Anchor shall be carbon steel with zinc plating & have a 4 3/4" embedment depth.

GENERAL CONTRACTOR SHALL INCLUDE 1 TON AT A MINIMUM COST OF $10,000/ TON OF MISCELLANEOUS STEEL BEAMS, CHANNELS AND ANGLES IN ADDITION TO THE FRAMING SHOWN ON THE PLANS AND DETAILS. GENERAL CONTRACTOR SHALL INCLUDE ERECTION, FABRICATION, DESIGN AND DETAILING COSTS FOR THIS ADDITIONAL FRAMING WITH THE BASE BID. THE USE OF MISCELLANEOUS STEEL IS TO BE RECORDED BY THE GENERAL CONTRACTOR AND ANY UNUSED AMOUNT IS TO BE CREDITED TO THE OWNER.

Steel Joist General Notes 5200:

1. The design, fabrication and erection of steel joists shall conform to the Standard Specifications for Open Web Steel Joists of the Steel Joist Institute. Joists have been designed according to the ASD Load Tables. Joist loads shown on the drawings are ASD loads.
2. All hangers supported from open web joists shall be located at bottom chord panel points and shall be connected without field welding or drilling holes in the bottom chord.
3. Joists shall have bridging per SJI Specifications. Roof joists shall have additional bridging, as required to resist stress reversal for the net uplift load indicated.
4. Roof joists shall be designed for a net wind uplift of 13.5 psf. One-third stress increase of joists for wind uplift will not be allowed.
5. Joist manufacturer shall design joists for mechanical and equipment loads noted on the framing plans in addition to the uniform dead and live loads. Coordinate equipment size and locations with mechanical contractor.
6. Joist manufacturer shall design roof joists for the snow drift and sliding snow loadings shown in the Design Loads. See Snow Drift Plan (on this sheet) for locations of drifts and sliding snow.
7. Attach joist top and bottom chord bridging to masonry walls with L2 1/2 x 2 1/2 x 3/16 x joist depth and (3) 1/2"Ø sleeve anchors, minimum. At "LH" use L3 x 3 x 1/4 x joist depth and 1/2"Ø expansion anchor and 18" o.c. (minimum (3) bolts per angle)

Steel Deck General Notes 5300:

1. Typical roof deck shall be 1 1/2" deep, 22 gauge, wide rib type and shall have nested side laps (Vulcraft 1.5B22, New Millennium 1.5B22 or approved equal). See Roof Framing Plans for limits of roof deck.
2. Roof deck shall be welded to the steel framing per the Roof Deck Fastening Pattern Detail 1/S1.2.
3. Roof deck fastening pattern has been designed for a net wind uplift of 25.5 psf at corner zones, 19.5 psf at side zones, and 11.7 psf at interior zones for roofs.
4. All deck shall be fastened per Steel Deck Institute (SDI) requirements.
5. Deck specified has been determined on basis of 3 span condition; deck supplier shall use heavier gauge if required for one and two span conditions.

Design Loads

1. Typical Roof Dead Load: 20 psf
2. Roof Live Load: 20 psf
3. Rain Intensity, (15 min, $_i$): 6.64 in/hr
4. Snow Load:
   - Ground Snow Load: 15 psf
   - Flat-roof Snow Load at main roof (P_f) = 16.6 psf
   - Slope Factor (C_s) = 1.0
   - Snow Exposure Factor (C_e) = 1.0
   - Snow Load Importance Factor (I_s) = 1.1
   - Thermal Factor (C_t) = 1.0
5. Snow Drift:

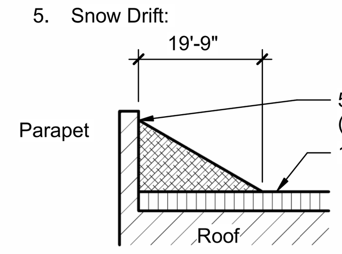

Ⓐ **Drift @ Parapet**

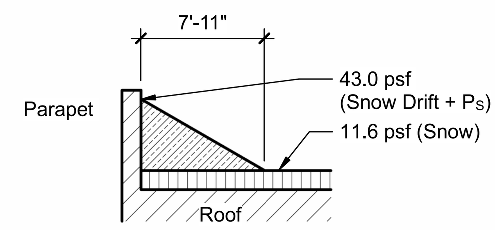

Ⓑ **Drift @ Parapet**

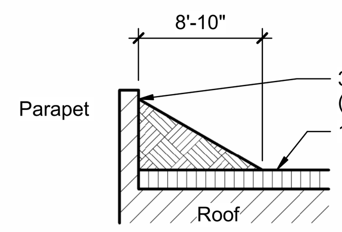

Ⓒ **Drift @ Parapet**

6. Wind Load:
   - Ultimate Design Wind Speed (V_{ult}): 115 mph
   - Nominal Design Wind Speed (V_{asd}): 89.1 mph
   - Risk Category III
   - Wind Exposure C
   - Internal Pressure Coefficient, GC_{pi} = ±0.18
7. Components & Cladding Wind Load (Unfactored):
   - Width of Edge Zone, a = 11.7 ft
   - Wall Pressures (10 ft^2)
     - End Zone Wall = 38.8 psf
     - Interior Zone = 31.5 psf
   - Wall Pressures (100 ft^2)
     - End Zone Wall = 30.2 psf
     - Interior Zone = 27.2 psf
   - Roof Pressures (10 ft^2)
     - Corner Zone = 91.0 psf
     - Eave & Rake Zone = 66.8 psf
     - Interior Zone = 50.6 psf
   - Roof Pressures (100 ft^2)
     - Corner Zone = 62.5 psf
     - Eave & Rake Zone = 52.5 psf
     - Interior Zone = 39.5 psf
8. Seismic:
   - Risk Category III
   - Seismic Importance Factor (I_e) = 1.0
   - S_S = 0.148
   - S_1 = 0.087
   - S_{DS} = 0.158
   - S_{D1} = 0.140
   - Site Class D (per Geotechnical Report)
   - Seismic Design Category C
   - Basic Structural System: Bearing Wall System
   - Seismic Resisting System: Intermediate Reinforced Masonry Shear Walls
   - Response Modification Coefficient (R): 3.500
   - Deflection Amplification Factor (C_d): 2.250
   - Seismic Response Coefficient (C_s): 0.056
   - Analysis Procedure: Equivalent Lateral Force Procedure
9. Building Code:
   - 2021 Arkansas Fire Prevention Code, Volume II - Adopted 2021 International Building Code
   - ASCE 7-16

THIS FACILITY HAS BEEN DESIGNED FOR THE SEISMIC CRITERIA AND BUILDING CODE NOTED ON THIS DRAWING IN ACCORDANCE WITH THE REQUIREMENTS OF ACT 1100.

NOTE:
PROVIDE 5/8"DIAMETER PUDDLE WELDS AT 6" O.C. FOR END LAPS (MIN. 2" LAP) AND ENDS OF EACH DECK RUN.

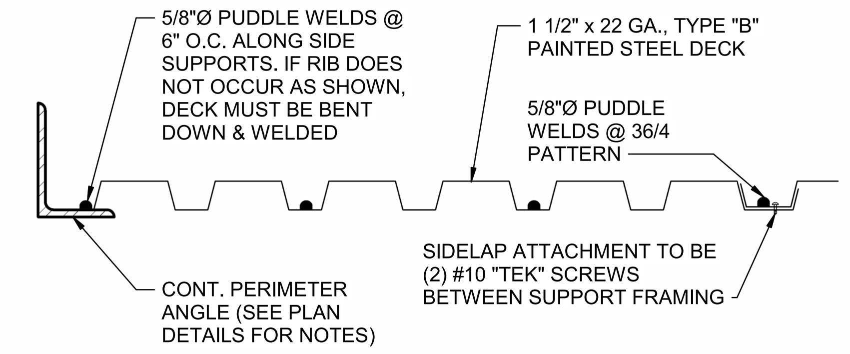

1 1/2" ROOF DECK

1 TYP. ROOF DECK FASTENING PATTERN DETAIL

NOT TO SCALE

NOTES:
1. AT L3 x 3 x 1/4 FRAMES, DELETE CLIP ANGLES, COPE VERTICAL LEG AND EXTEND HORIZONTAL LEG OVER FRAMING - WELD ALL AROUND.
2. FOR ROOF OPENINGS OVER 6" TO 12" WIDE (I.E.: OVER-SIZED OPENING FOR ROOF DRAINS), PROVIDE L2 x 2 x 1/4 FRAME AROUND OPENING AND EXTEND TO JOISTS- WELD ALL AROUND.

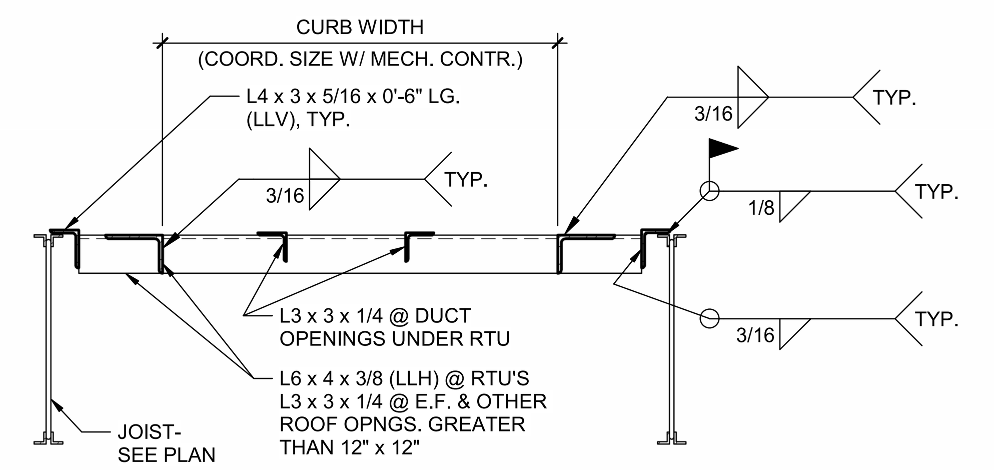

2 TYP. ROOF FRAMED OPNG. DETAIL

NOT TO SCALE

NOTE:
PROVIDE JOIST REINFORCEMENT WHEN CONCENTRATED LOAD FROM PIPES OR EQUIPMENT OCCURS 4" OR MORE FROM A JOIST PANEL POINT.

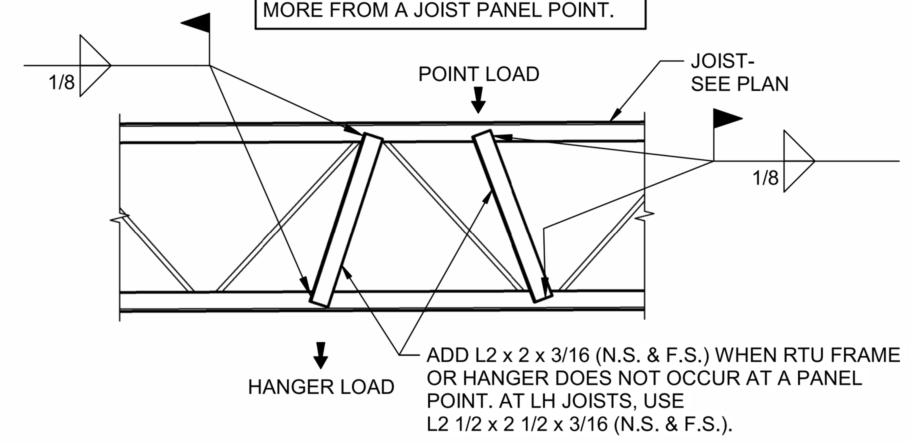

3 TYP. JOIST REINFORCEMENT AT CONCENTRATED LOADS

NOT TO SCALE

LEGEND:

Ⓐ DENOTES LIMITS OF SLIDING SNOW @ PARAPET (SEE DESIGN LOADS)

Ⓑ DENOTES LIMITS OF SNOW DRIFT @ PARAPET (SEE DESIGN LOADS)

Ⓒ DENOTES LIMITS OF SNOW DRIFT @ PARAPET (SEE DESIGN LOADS)

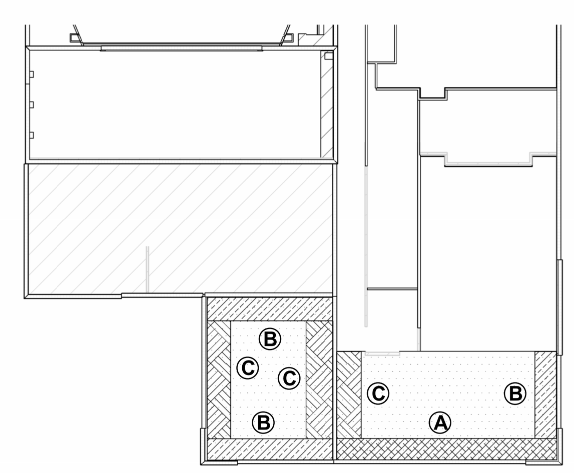

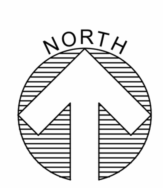

4 SNOW DRIFT & SLIDING SNOW PLAN

1" = 50'-0"

4/6/2026 8:49:20 AM
C:\Users\asd\Documents\26004 - BWHS Arts & Athletics Addition - Band - Bentonville, AR_STRUCT_R25_ASDMTXR7.rvt

STATE OF ARKANSAS REGISTERED PROFESSIONAL ENGINEER No. 22899 ANDREW S. DESCHENES 04.06.2026

CERTIFICATE OF AUTHORIZATION Tatum Smith Welcher Engineers, Inc. No. 218 ARKANSAS ENGINEER

HightJackson ASSOCIATES
5201 W Village Parkway, Suite 300 | Rogers, Arkansas 72758 | (479) 464-4965 | www.hjarch.com

An Addition for BWHS
BWHS Band Addition
1351Gamble Rd, Centerton, AR 72719

DRAWN BY. TMW
CHECK BY. ASD
ISSUE DATE 04/06/2026
PROJECT NO. 2421
REVISION DATES

TATUM SMITH WELCHER
STRUCTURAL ENGINEERS
(479) 621-6128 ROGERS, ARKANSAS
TSW #: 26004 PM: ASD DE: BWA

FRAMING GENERAL NOTES & TYP. DETAILS
SHEET
S1.2

COPYRIGHT 2026
THESE DRAWINGS AND SPECIFICATIONS ARE THE EXCLUSIVE PROPERTY OF HIGHT JACKSON ASSOCIATES.PA. USE OR REPRODUCTION IS PROHIBITED WITHOUT WRITTEN CONSENT

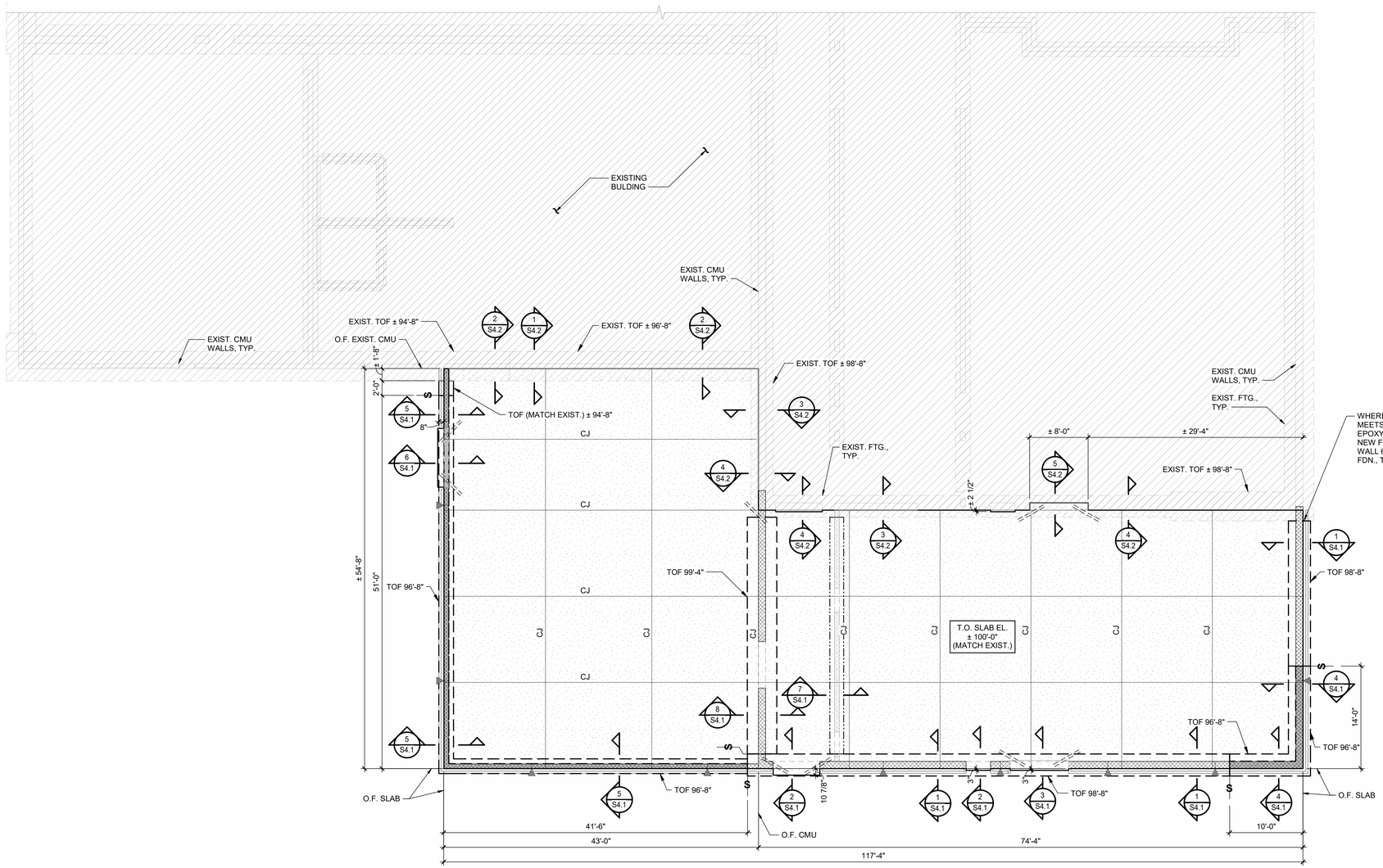

NORTH

1 FOUNDATION PLAN

1/8" = 1'-0"

LEGEND:

O.F.	DENOTES OUTSIDE FACE
TOF	DENOTES TOP OF FOOTING
±	DENOTES DIMENSION OR ELEVATION TO BE FIELD VERIFIED
	DENOTES LIMITS OF 4" SLAB (T.O. SLAB EL. 100'-0") SEE PLAN NOTES
	DENOTES LIMITS OF EXISTING BUILDING
	DENOTES THICKENED SLAB
	DENOTES LOAD-BEARING CMU WALL
	DENOTES NON-LOAD-BEARING CMU WALL
	DENOTES CONCRETE STEM WALL
S	DENOTES FTG. STEP MARK (SEE DTL. 3 / S1.1)
100'-0"	DENOTES TOP OF SLAB EL.
	DENOTES LOCATION OF RE-ENTRANT CORNER BARS (SEE CONC. GEN. NOTE #8)
▼	DENOTES WALL CONTROL JOINT SEE S3.0 FOR LOCATION

PLAN NOTES:

1. 4" S.O.G. CONSTRUCTION: 4" CONCRETE SLAB REINFORCED W/ 6 x 6-W1.4 x W1.4 WWF ON 15 MIL POLYETHYLENE FILM (COORD. W/ ARCH. SPECS.) OVER 4" CRUSHED STONE, TYP. PLACE WWF. 2" CLR. FROM TOP OF SLAB.
2. ALL ELEVATIONS BASED ON FINISH FLOOR EL. 100'-0". ACTUAL FIN. FLR. EL. 1357.84' AS ESTABLISHED BY HALFF ASSOCIATES, INC.
3. TOP OF FOOTING ELEVATION 98'-8", TYP. (U.N.O.).
4. SEE ARCH. DWGS. FOR DIMENSIONS NOT SHOWN.
5. "CJ" DENOTES CONTROL OR CONSTRUCTION JOINT. (SEE DTLS. 1/S1.1 & 2/S1.1).
6. COORDINATE LOCATION & LIMITS OF VENEER WITH ARCH. DWGS.
7. COORDINATE DOOR LOCATIONS WITH ARCH. DWGS.
8. SEE ARCH. DWGS. FOR LOCATIONS OF NON-LOAD-BEARING MASONRY WALLS BEARING ON THICKENED SLABS.
9. SEE ARCH./ PLUMBING DWGS. FOR EXACT LOCATIONS OF ALL FLOOR DRAINS, SLOPED & RECESSED SLABS.
10. COORDINATE LOCATIONS OF PLUMBING LINES W/ PLUMBER PRIOR TO POURING FOOTINGS & SLABS-ON-GRADE.
11. SEE DWG. S1.1 FOR GENERAL NOTES & TYP. DETAILS.
12. SEE ARCH. FLOOR PATTERN PLANS FOR SLAB LOCATIONS WITH POLISHED CONCRETE.

STATE OF ARKANSAS REGISTERED PROFESSIONAL ENGINEER No. 22899 ANDREW S. DESCHENES
04.06.2026

CERTIFICATE OF AUTHORIZATION Tatum Smith Welcher Engineers, Inc. No. 218 ARKANSAS ENGINEERING

Hight Jackson ASSOCIATES
5201 W Village Parkway, Suite 300 | Rogers, Arkansas 72758 | (479) 464-4965 | www.hjarch.com

An Addition for BWHS
BWHS Band Addition
1351Gamble Rd, Centerton, AR 72719

DRAWN BY:	TMW
CHECK BY:	ASD
ISSUE DATE:	04/06/2026
PROJECT NO.	2421
REVISION DATES	

FOUNDATION PLAN

SHEET

S2.1

COPYRIGHT 2026
THESE DRAWINGS AND SPECIFICATIONS ARE THE EXCLUSIVE PROPERTY OF HIGHT JACKSON ASSOCIATES PA. USE OR REPRODUCTION IS PROHIBITED WITHOUT WRITTEN CONSENT

TATUM SMITH WELCHER
STRUCTURAL ENGINEERS
(479) 621-6128 ROGERS, ARKANSAS
TSW #: 26004 PM: ASD DE: BWA

4/6/2026 8:49:26 AM
C:\Users\asd\Documents\26004 - BWHS Arts & Athletics Addition - Band - Bentonville, AR_STRUCT_R25_ASDMTXR7.rvt

LINTEL SCHEDULE

MARK	WALL LOCATIONS	TYPE & SIZE (THICKNESS x HEIGHT)	REINFORCEMENT OR ATTACHMENT	BRICK ANGLE OR PLATES	REMARKS
L1	12" CMU	CMU 12" x 8" BOND BM.	(2) #5 BOTT.	-----	SEE NOTES #1, #2, #3, #4, #5 & #6
L2	12" CMU	CMU 12" x 8" OPEN BOTT. BOND BM. ON 12" x 8" CLOSED BOTT. BOND BM. (16" TOTAL DEPTH)	(2) #5 TOP & BOTTOM	-----	SEE NOTES #1, #2, #3, #4, #5 & #6
L3	EXIST. 12" CMU	(2) L5 x 5 x 5/16	-----	-----	SEE NOTES #1, #2, #7 & DTL. 2/S3.0
L4	8" CMU	CMU 8" x 8" BOND BM.	(1) #5 BOTT.	-----	SEE NOTES #1, #2, #3, #4, #5 & #6
L5	8" CMU	(2) CMU 8" x 8" OPEN BOTT. BOND BM. ON 8" x 8" CLOSED BOTT. BOND BM. (24" TOTAL DEPTH)	(1) #5 TOP & BOTTOM	-----	SEE NOTES #1, #2, #3, #4, & #5
L6	EXIST. 8" CMU	(2) L5 x 3 1/2 x 1/4 (LLV)	-----	-----	SEE NOTES #1, #2, #7, & DTL. 2/S3.0

LINTEL SCHEDULE NOTES:
1. SEE ARCH. DWGS. FOR EXACT LOCATION OF ALL LINTELS.
2. COORDINATE ALL BOTTOM PLATE/BEAM/CMU/ANGLE ELEVATIONS WITH ARCH. DWGS.
3. ALL CMU LINTELS SHALL HAVE 8" MIN. BEARING EACH SIDE OF OPENING.
4. FILL ALL CMU LINTELS WITH 2,000 PSI GROUT.
5. ALL 8" CMU LINTELS SHALL HAVE A MIN. (2) CELLS OF (1) #5 JAMB STEEL EACH SIDE OF OPENING.12" CMU LINTELS SHALL HAVE (2) CELLS OF (2) #5 EACH FACE EACH SIDE OF OPENING, U.N.O. ON THE DRAWING.
6. WHERE MECHANICAL DUCTS PASS THROUGH MASONRY WALLS, PROVIDE L4 LINTEL AT 8" CMU WALLS AND L1 LINTEL AT 12" CMU WALLS FOR OPENINGS NOT TO EXCEED 4'-0" WIDE. FOR OPENING WIDTHS FROM 4'-0" TO 6'-0", PROVIDE L5 LINTEL AT 8" CMU WALLS AND L2 LINTEL AT 12" CMU WALLS. FOR OPENING WIDTHS LARGER THAN 6'-0", COORDINATE WITH ARCH./ENGINEER.
7. ALL STEEL LINTELS SHALL HAVE 6" MIN BEARING EACH SIDE OF OPENING.

MASONRY WALL REINFORCEMENT SCHEDULE

MARK	WALL LOCATION	BOND BEAM REINF.	BOND BEAM LOCATIONS	VERT. REINF.	FOUNDATION DOWELS	REMARKS
A	12" CMU	(2) #5 BOTT.	TOP OF WALL, ROOF EL., & WHERE NOTED ON DWGS.	#5 @ 48" O.C. EA. FACE	#5 DOWEL @ 48" O.C. EA. FACE	SEE NOTE #2
B	8" CMU	(1) #5 BOTT.	TOP OF WALL, ROOF EL., & WHERE NOTED ON DWGS.	#5 @ 48" O.C.	#5 DOWEL @ 48" O.C. CENTER IN WALL	SEE NOTE #2
C	8" CMU	(1) #5 BOTT.	TOP OF WALL	-----	#4 x 2'-6" DOWEL @ 48" O.C. CENTER IN WALL	SEE NOTES #1 & #3 & DTL. 4/S3.0

MASONRY WALL REINFORCEMENT SCHEDULE NOTES:
1. WHERE TOP OF WALL IS UNSUPPORTED BY THE ROOF, BRACE TOP OF WALL WITH DIAGONAL L3 x 3 x 1/4 WELDED TO THE ROOF ABOVE AT 8'-0" O.C. MAXIMUM (SEE DTL. 4/S3.0). WHERE WALL EXTENDS TO UNDERSIDE OF ROOF DECK ABOVE, HOLD WALL DOWN 1/2" & SANDWICH TOP OF WALL WITH (2) L2 x 2 x 1/8 x 0'- 6" LONG EACH ATTACHED TO DECK WITH (2) #8 SELF-TAPPING SCREWS (SPACE ANGLES AT 4'-0" O.C.). THIS BRACING IS PERMANENT BRACING REQUIRED FOR SEISMIC LOADS.
2. UNO AT SLAB-ON-GRADE, DRILL & EPOXY DOWELS 8" INTO SLAB.
3. UNO AT SLAB-ON-GRADE, DRILL & EPOXY DOWELS 6" INTO SLAB.

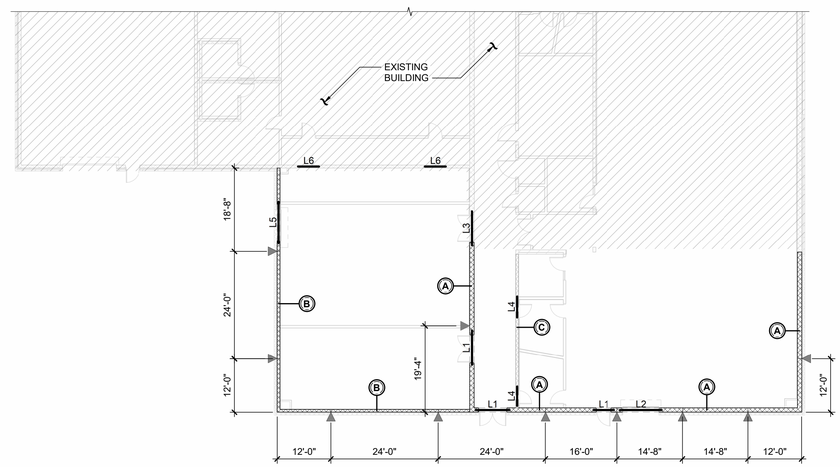

NORTH

1 LINTEL & MASONRY PLAN
1/16" = 1'-0"

PLAN NOTES:
1. SEE DWGS. S1.1 & S1.2 FOR GENERAL NOTES & TYP. DETAILS.

LEGEND:

- L1 — DENOTES LINTEL MARK, SEE LINTEL SCHED.
- DENOTES LOAD-BEARING CMU WALL
- DENOTES NON-LOAD-BEARING CMU WALL
- (A) — DENOTES MASONRY WALL REINF. MARK, SEE MASONRY WALL REINF. SCHED.
- ▼ — DENOTES WALL CONTROL JOINT

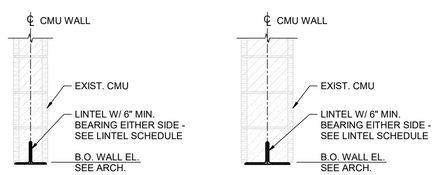

8" CMU **12" CMU**

2 NEW LINTEL IN EXIST. MASONRY WALL DTL.
3/4" = 1'-0"

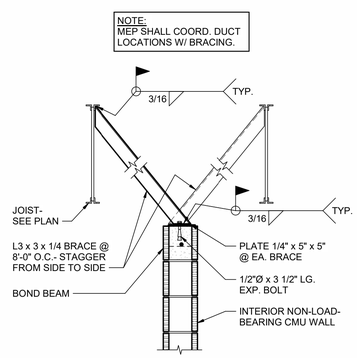

3 TYP. CMU WALL BRACING
NOT TO SCALE

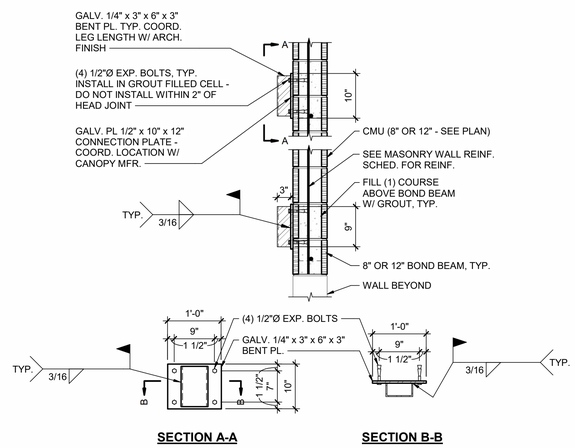

4 TYP. CANOPY CONNECTION PLATE DETAIL
3/4" = 1'-0"

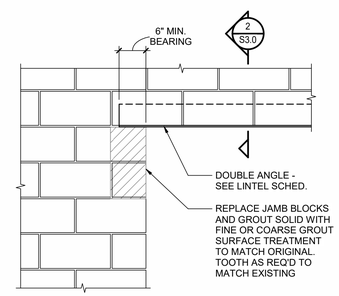

5 NEW OPENING IN EXISTING MASONRY WALL DETAIL
NOT TO SCALE

STATE OF ARKANSAS
REGISTERED PROFESSIONAL ENGINEER
No. 22090
ANDREW S. DESPINES
04.06.2026

CERTIFICATE OF AUTHORIZATION
Tatum Smith Welcher Engineers, Inc
No. 218
ARKANSAS ENGINEERING

Hight Jackson ASSOCIATES
5201 W Village Parkway, Suite 300 | Rogers, Arkansas 72758 | (479) 464-4965 | www.hjarch.com

An Addition for BWHS
BWHS Band Addition
1351Gamble Rd, Centerton, AR 72719

DRAWN BY. TMW
CHECK BY. ASD
ISSUE DATE 04/06/2026
PROJECT NO. 2421
REVISION DATES

LINTEL & MASONRY PLAN & DTLS.
SHEET
S3.0

TATUM SMITH WELCHER
STRUCTURAL ENGINEERS
(479) 621-6128 ROGERS, ARKANSAS
TSW #: 26004 PM: ASD DE: BWA

COPYRIGHT 2026
THESE DRAWINGS AND SPECIFICATIONS ARE THE EXCLUSIVE PROPERTY OF HIGHT JACKSON ASSOCIATES,PA. USE OR REPRODUCTION IS PROHIBITED WITHOUT WRITTEN CONSENT.

4/6/2026 8:49:29 AM
C:\Users\asd\Documents\26004 - BWHS Arts & Athletics Addition - Band - Bentonville, AR_STRUCT_R25_ASDMTWR7.rvt

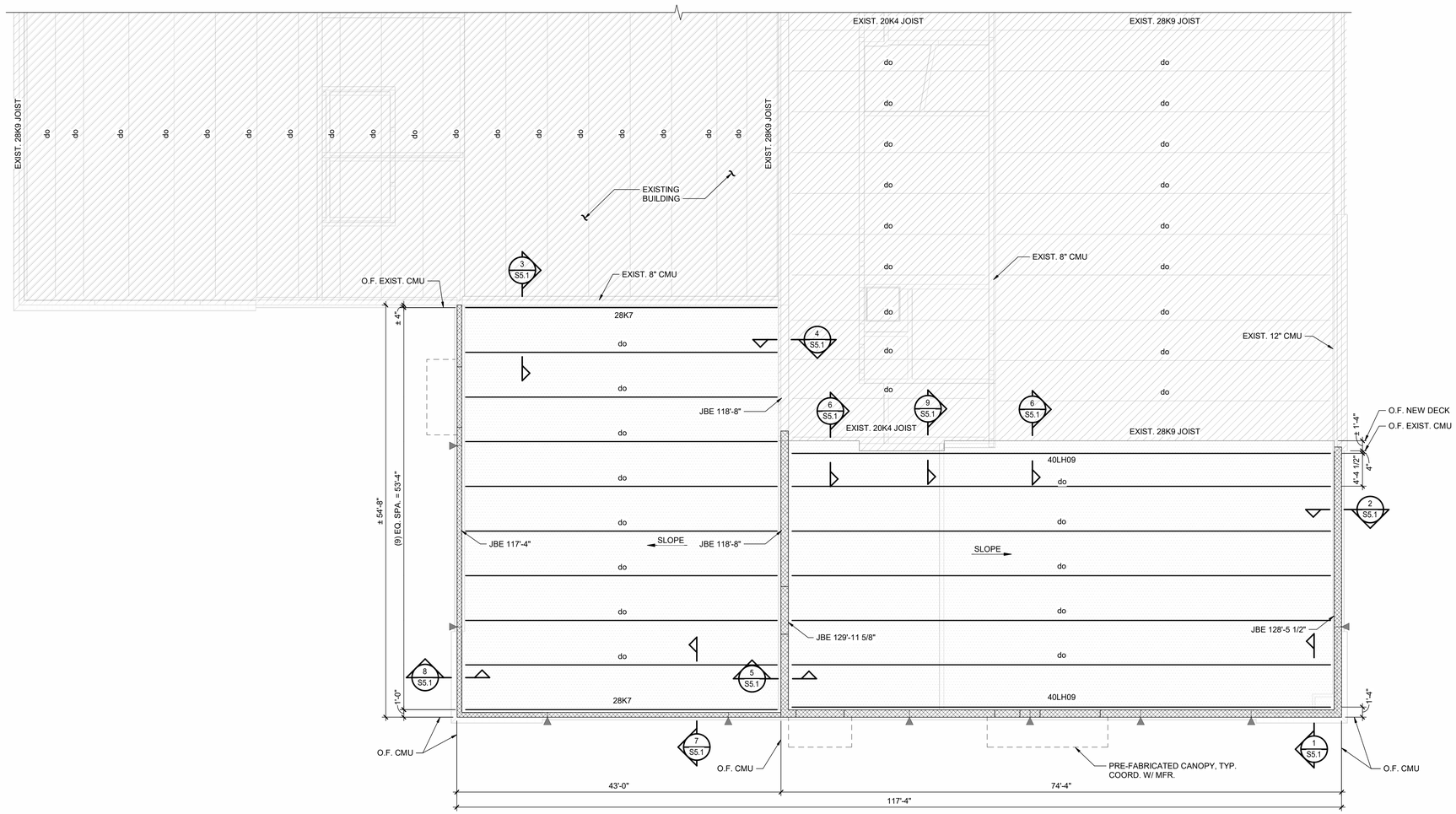

1 ROOF FRAMING PLAN

1/8" = 1'-0"

LEGEND:

O.F.	DENOTES OUTSIDE FACE
JBE	DENOTES JOIST BEARING ELEVATION
	DENOTES LIMITS OF 1 1/2" x 22 GA. ROOF DECK (SEE PLAN NOTES)
	DENOTES LIMITS EXISTING BIULDING
SLOPE	DENOTES DIRECTION OF ROOF SLOPE (COORD. PITCH W/ ARCH.)
	DENOTES LOAD-BEARING CMU WALL
	DENOTES NON-LOAD-BEARING CMU WALL
▼	DENOTES WALL CONTROL JOINT. SEE S3.0 FOR LOCATION

PLAN NOTES:

1. ROOF DECK: 1 1/2" DEEP, 22 GA. PAINTED WIDE RIB STEEL DECK (SEE STEEL DECK GENERAL NOTES FOR ATTACHMENT REQUIREMENTS).
2. TOP OF "K" SERIES JOISTS (+2 1/2") TYP., (U.N.O.)
3. TOP OF "LH" SERIES JOISTS (+5") TYP., (U.N.O.)
4. JOIST BEARING ELEVATION VARIES, SEE PLAN.
5. ALL ELEVATIONS BASED ON MAIN LEVEL FINISH FLOOR EL. 100'-0". ACTUAL FIN. FLR. EL. 1357.84' AS ESTABLISHED BY HALFF ASSOCIATES, INC
6. SEE DWG. S1.2 FOR GENERAL NOTES AND TYPICAL DETAILS.
7. SEE ARCH. DWGS. AND FOUNDATION PLANS FOR DIMENSIONS NOT SHOWN.

STATE OF ARKANSAS REGISTERED PROFESSIONAL ENGINEER No. 22090 ANDREW S. DESCHENES
04.06.2026

CERTIFICATE OF AUTHORIZATION Tatum Smith Welcher Engineers, Inc. No. 218 ARKANSAS ENGINEERING

Hight Jackson ASSOCIATES
5201 W Village Parkway, Suite 300 | Rogers, Arkansas 72758 | (479) 464-4965 | www.hjarch.com

An Addition for BWHS
BWHS Band Addition
1351Gamble Rd, Centerton, AR 72719

DRAWN BY.	TMW
CHECK BY.	ASD
ISSUE DATE	04/06/2026
PROJECT NO.	2421
REVISION DATES	

ROOF FRAMING PLAN

SHEET S3.1

TATUM SMITH WELCHER
STRUCTURAL ENGINEERS
(479) 621-6128 ROGERS, ARKANSAS
TSW #: 26004 PM: ASD DE: BWA

COPYRIGHT 2026
THESE DRAWINGS AND SPECIFICATIONS ARE THE EXCLUSIVE PROPERTY OF HIGHT JACKSON ASSOCIATES, PA. USE OR REPRODUCTION IS PROHIBITED WITHOUT WRITTEN CONSENT.

4/6/2026 8:49:33 AM
C:\Users\asdu\Documents\26004 - BWHS Arts & Athletics Addition - Band - Bentonville, AR_STRUCT_R25_ASDMTXR7.rvt

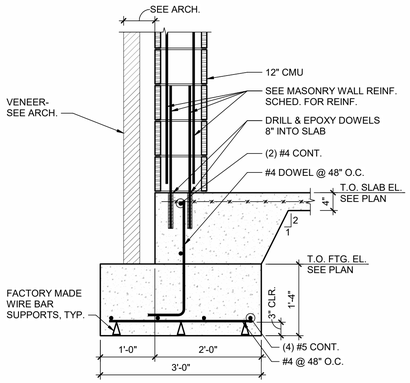

1 SECTION
3/4" = 1'-0"

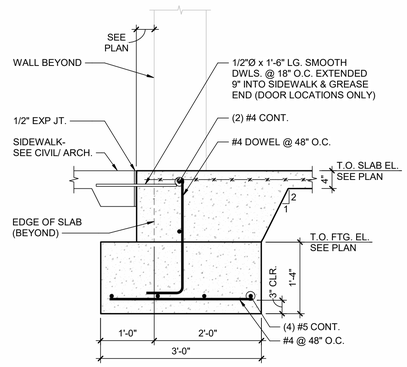

2 SECTION
3/4" = 1'-0"

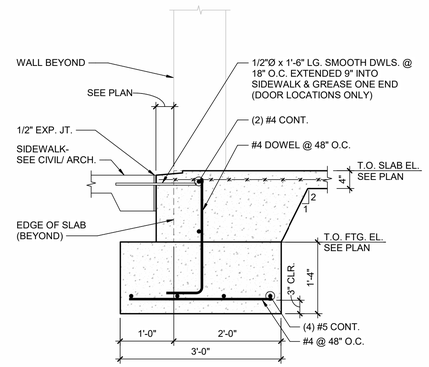

3 SECTION
3/4" = 1'-0"

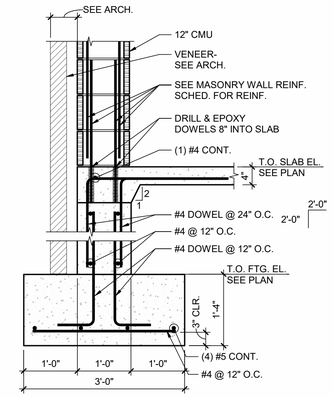

4 SECTION
3/4" = 1'-0"

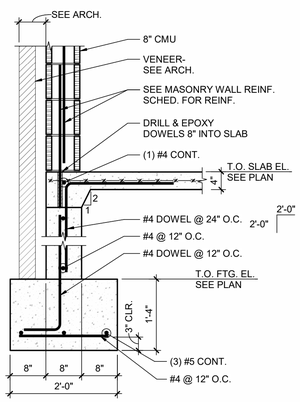

5 SECTION
3/4" = 1'-0"

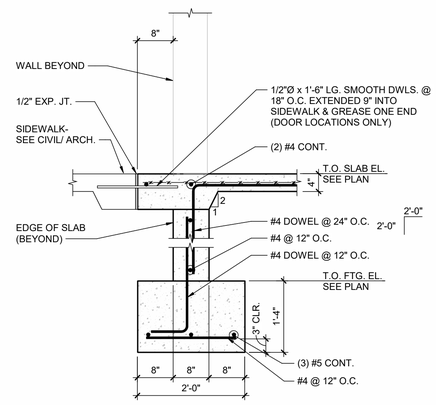

6 SECTION
3/4" = 1'-0"

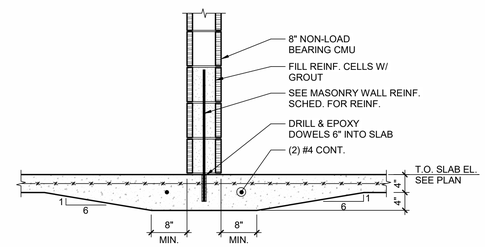

7 SECTION
3/4" = 1'-0"

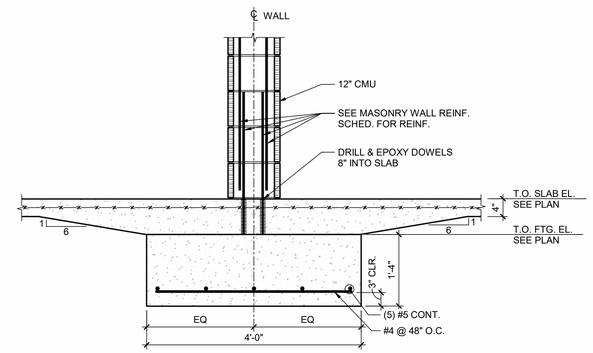

8 SECTION
3/4" = 1'-0"

TATUM SMITH WELCHER
STRUCTURAL ENGINEERS
(479) 621-6128 ROGERS, ARKANSAS
TSW #: 26004 PM: ASD DE: BWA

STATE OF ARKANSAS
REGISTERED PROFESSIONAL ENGINEER
ANDREW S. DESCHENES
No. 22090
04.06.2026

CERTIFICATE OF AUTHORIZATION
Tatum Smith Welcher Engineers, Inc.
No. 218
ARKANSAS ENGINEERING

Hight Jackson ASSOCIATES
5201 W Village Parkway, Suite 300 | Rogers, Arkansas 72758 | (479) 464-4965 | www.hjarch.com

An Addition for BWHS
BWHS Band Addition
1351Gamble Rd, Centerton, AR 72719

DRAWN BY:	TMW
CHECK BY:	ASD
ISSUE DATE	04/06/2026
PROJECT NO.	2421
REVISION DATES	

FOUNDATION DETAILS

SHEET
S4.1

COPYRIGHT 2026
THESE DRAWINGS AND SPECIFICATIONS ARE THE EXCLUSIVE PROPERTY OF HIGHT JACKSON ASSOCIATES PA. USE OR REPRODUCTION IS PROHIBITED WITHOUT WRITTEN CONSENT

4/6/2026 8:49:36 AM
C:\Users\asd\Documents\26004 - BWHS Arts & Athletics Addition - Band - Bentonville, AR_STRUCT_R25_ASDMTXR7.rvt

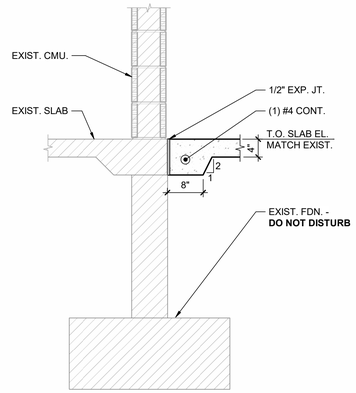

1 SECTION
3/4" = 1'-0"

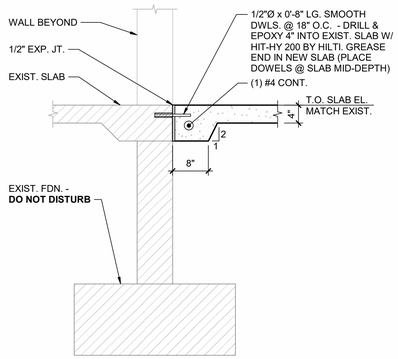

2 SECTION
3/4" = 1'-0"

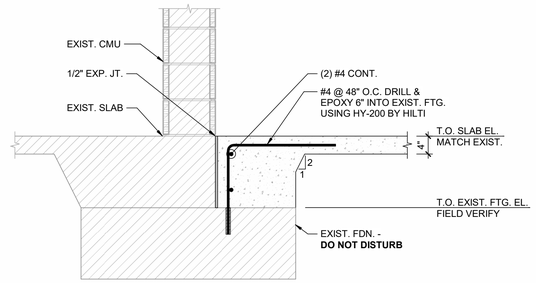

3 SECTION
3/4" = 1'-0"

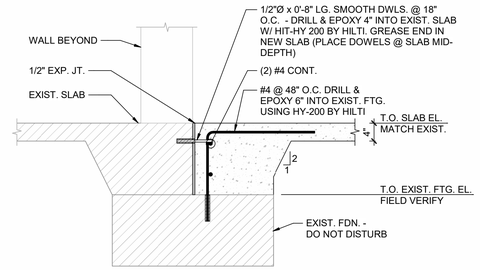

4 SECTION
3/4" = 1'-0"

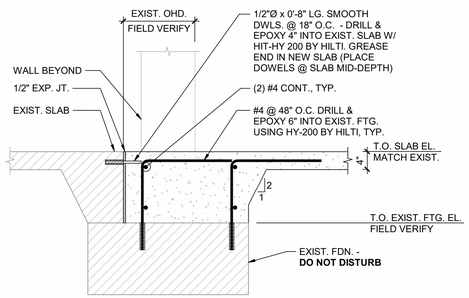

5 SECTION
3/4" = 1'-0"

STATE OF ARKANSAS
REGISTERED PROFESSIONAL ENGINEER
No. 22090
ANDREW S. DESCHENES
04.06.2026

CERTIFICATE OF AUTHORIZATION
Tatum Smith Welcher Engineers, Inc.
No. 218
ARKANSAS ENGINEERING

HightJackson ASSOCIATES
5201 W Village Parkway, Suite 300 | Rogers, Arkansas 72758 | (479) 464-4965 | www.hjarch.com

An Addition for BWHS
BWHS Band Addition
1351 Gamble Rd, Centerton, AR 72719

DRAWN BY: TMW
CHECK BY: ASD
ISSUE DATE: 04/06/2026
PROJECT NO. 2421
REVISION DATES

FOUNDATION DETAILS

SHEET
S4.2

TATUM SMITH WELCHER
STRUCTURAL ENGINEERS
(479) 621-6128 ROGERS, ARKANSAS
TSW #: 26004 PM: ASD DE: BWA

COPYRIGHT 2026
THESE DRAWINGS AND SPECIFICATIONS ARE THE EXCLUSIVE PROPERTY OF HIGHT JACKSON ASSOCIATES PA. USE OR REPRODUCTION IS PROHIBITED WITHOUT WRITTEN CONSENT

4/6/2026 8:49:39 AM
C:\Users\asd\Documents\26004 - BWHS Arts & Athletics Addition - Band - Bentonville, AR_STRUCT_R25_ASDMTXR7.rvt

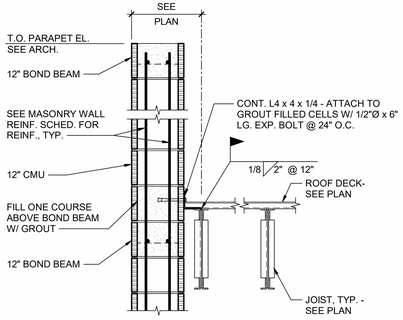

1 SECTION
3/4" = 1'-0"

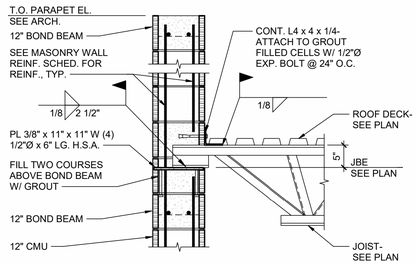

2 SECTION
3/4" = 1'-0"

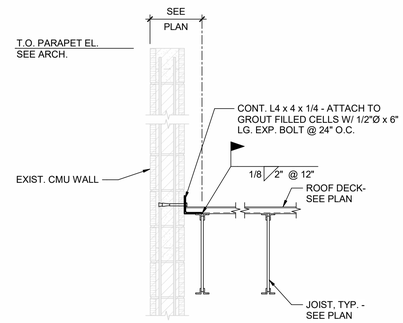

3 SECTION
3/4" = 1'-0"

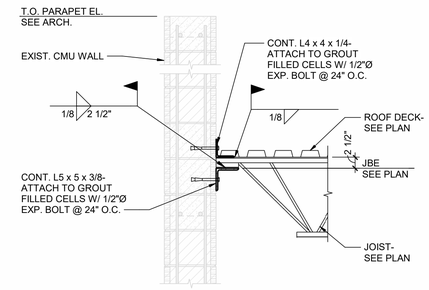

4 SECTION
3/4" = 1'-0"

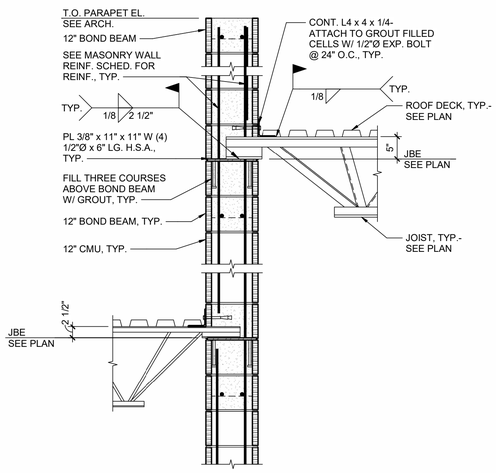

5 SECTION
3/4" = 1'-0"

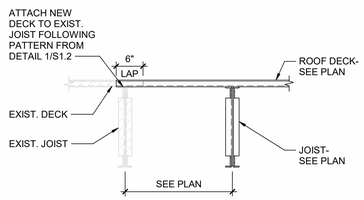

6 SECTION
3/4" = 1'-0"

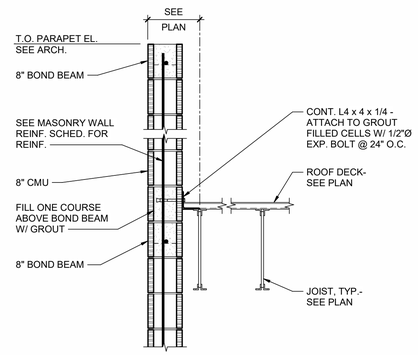

7 SECTION
3/4" = 1'-0"

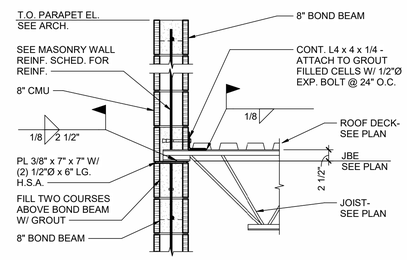

8 SECTION
3/4" = 1'-0"

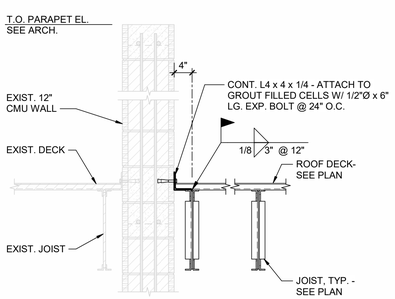

9 SECTION
3/4" = 1'-0"

STATE OF ARKANSAS
REGISTERED PROFESSIONAL ENGINEER
No. 22090
ANDREW S. DESCHENES
04.06.2026

CERTIFICATE OF AUTHORIZATION
Tatum Smith Welcher Engineers, Inc
No. 218
ARKANSAS ENGINEERING

HightJackson ASSOCIATES
5201 W Village Parkway, Suite 300 | Rogers, Arkansas 72758 | (479) 464-4965 | www.hjarch.com

An Addition for BWHS
BWHS Band Addition
1351 Gamble Rd, Centerton, AR 72719

DRAWN BY:	TMW
CHECK BY:	ASD
ISSUE DATE	04/06/2026
PROJECT NO:	2421
REVISION DATES	

FRAMING DETAILS

SHEET
S5.1

TATUM SMITH WELCHER
STRUCTURAL ENGINEERS
(479) 621-6128 ROGERS, ARKANSAS
TSW #: 26004 PM: ASD DE: BWA

COPYRIGHT 2026
THESE DRAWINGS AND SPECIFICATIONS ARE THE EXCLUSIVE PROPERTY OF HIGHT JACKSON ASSOCIATES PA. USE OR REPRODUCTION IS PROHIBITED WITHOUT WRITTEN CONSENT

4/6/2026 8:49:43 AM
C:\Users\asad\Documents\26004 - BWHS Arts & Athletics Addition - Band - Bentonville, AR_STRUCT_R25_ASDMTXR7.rvt

GENERAL PLUMBING NOTES

1. ALL PLUMBING MATERIALS AND INSTALLATION SHALL COMPLY WITH THE ARKANSAS STATE PLUMBING CODE, LATEST EDITION.
2. INSTALL ALL DOMESTIC HOT AND COLD WATER PIPING AS PER STATE AND LOCAL CODES.
3. INSULATE ABOVE GRADE CONCEALED DOMESTIC HOT AND COLD WATER LINES PER SPECIFICATIONS, SECTION 15082 OR 22 07 19.
4. INSTALL DEEP SEAL TRAPS AT ALL DRAIN CONNECTIONS.
5. COORDINATE UNDER SLAB PIPING WITH COLUMNS AND FOOTINGS. REFER TO STRUCTURAL DRAWINGS.
6. MINIMUM DEPTH OF COVER FOR WATER LINES IS 30 IN.
7. BURY YELLOW #10 THWN COPPER TRACER WIRE IN TRENCH WITH ALL UNDER GROUND PLASTIC SERVICES. LEAVE ENDS EXPOSED FOR FUTURE LOCATION.
8. VERIFY LOCATION AND SIZE OF EXISTING SITE UTILITIES WITH UTILITY AUTHORITIES PRIOR TO CONSTRUCTION.
9. ALL IMPROVEMENTS (PAVEMENTS, CURB AND GUTTER, SOD, ETC.) SHALL BE REPLACED BY GENERAL CONTRACTOR TO PRECONSTRUCTION CONDITION.
10. WHERE FIRE RATED PARTITIONS OR FLOORS OCCUR, ALL FLOOR TO FLOOR AND ROOM TO ROOM PENETRATIONS SHALL BE PROPERLY FIRE SEALED WITH U.L. LISTED AND CLASSIFIED FIRE CAULK OR FIRE SEALED BY USING AN APPROVED FIRE SEAL SLEEVE METHOD WHICH MEETS U.L. REQUIREMENTS. ALL OTHER PENETRATIONS OF RATED CHASES OR WALLS SHALL BE PROPERLY FIRE SEALED AND WHERE EXTENDING THROUGH SUCH RATED SURFACE SHALL BE A RATED FIRE STOP PENETRATION. ALL FIRE STOPPING, FIRE CAULKING AND FIRE SLEEVING OR OTHER FIRE SEALING SHALL BE ACCEPTABLE BY THE LOCAL AUTHORITIES AND SHALL BEAR THE U.L. SEAL.
11. INSTALL DOMESTIC WATER, GAS AND COMPRESSED AIR LINES TIGHT AGAINST BUILDING ROOF STRUCTURE.
12. VERIFY LOCATION, INVERT AND SIZE OF ALL EXISTING UTILITIES PRIOR TO BEGINNING CONSTRUCTION.
13. ALL MECHANICAL INSTALLATIONS SHALL CONFORM TO THE LATEST ACCEPTABLE ARKANSAS STATE MECHANICAL CODE.
14. HORIZONTAL BRANCHES SHALL CONNECT TO HORIZONTAL STACK OFFSETS AND TO THE BASES OF STACKS AT A POINT LOCATED NOT LESS THAN 10 PIPE DIAMETERS DOWNSTREAM FROM THE STACK.
15. CONTRACTOR SHALL PROVIDE "AS BUILT" DRAWINGS OF ALL PLUMBING AND PIPING SYSTEMS UPON COMPLETION OF THE PROJECT.
16. THE CONTRACTOR SHALL FAMILIARIZE HIMSELF WITH THE DRAWINGS, THE BUILDING SITE, AND OTHER INFORMATION PRESENTED FOR THE CONSTRUCTION OF THIS PROJECT. IF CONTRACTOR HAS QUESTIONS REGARDING ASSEMBLIES OR LAYOUTS WITH THE PROJECT HE SHALL MAKE THEM KNOWN TO THE ENGINEER IN WRITING PRIOR TO BIDDING THE PROJECT. CLAIMS MADE SUBSEQUENT TO THE BID WILL NOT BE ACCEPTED IF IT IS DETERMINED THAT PROPER FAMILIARIZATION COULD HAVE AVOIDED SUCH CLAIM.
17. MECHANICAL CONTRACTOR SHALL COORDINATE INSTALLATION PLUMBING SITE UTILITIES WITH SITE WORK OF OTHER TRADES. IN INSTANCES WHERE COORDINATION REQUIRES DEVIATION FROM PLANS MECHANICAL CONTRACTOR SHALL NOTIFY ENGINEER OF PROPOSED CHANGES.
18. PROVIDE DRIP PAN FOR ENTIRE LENGTH OF PIPE WHERE PIPE MUST BE INSTALLED ABOVE ELECTRICAL EQUIPMENT.
19. DO NOT ROUTE GROUPS OF CONDUIT, PIPES, AND SLEEVES ABOVE FOOTINGS UNLESS NOTED TO DO SO. IF CONFLICT OCCURS, CONSULT ARCHITECT/ENGINEER
20. LIMIT WIDTH OF CONDUIT, PIPES AND SLEEVES NOT TO EXCEED 3 FEET IN WIDTH AS IT PASSES UNDER WALL FOOTING. AS MUCH AS POSSIBLE, ALIGN THE ITEMS PERPENDICULAR TO THE FOOTING AS IT PASSES BELOW FOOTING.
21. PROVIDE A MINIMUM SPACING OF 2 FEET BETWEEN CONDUIT OR PIPE GROUPS AS ITEMS PASS UNDER FOOTINGS.
22. DO NOT ROUTE CONDUITS, PIPE OR SLEEVES UNDER COLUMN FOOTINGS OR PAD FOOTINGS.
23. MECHANICAL CONTRACTOR MUST REVIEW ALL ARCHITECTURAL DRAWINGS FOR EXACT LOCATION OF PLUMBING FIXTURES, ROOF, OVERFLOW AND FLOOR DRAINS. IF PLUMBING FIXTURES OR DRAINS ARE SHOWN ON THE ARCHITECTURAL DRAWINGS THEY MUST BE INCLUDED IN THE CONTRACT EVEN IF NOT SHOWN ON THE MECHANICAL DRAWINGS.
24. DO NOT SCALE DIRECTLY FROM THE PLUMBING DRAWINGS. REFER TO ARCHITECTURAL DRAWINGS FOR ALL DIMENSIONAL INFORMATION.
25. ALL PLUMBING SANITARY WASTE AND VENT PIPING INSTALLED IN FIRE RATED WALLS OR PLENUM RETURN AIR SYSTEMS SHALL BE CAST IRON. REFER TO ARCHITECTURAL PLANS FOR LIFE SAFETY INFORMATION.

PLUMBING FIXTURE SCHEDULE

MARK	FIXTURE	MANUFACTURER	MODEL	MOUNT	CONNECTION CW	CONNECTION HW	CONNECTION SS	REMARKS / ACCESSORIES
P-1	ROOF DRAIN	WADE	3000-AE-53	ROOF	-	-	*	*SIZE AS INDICATED ON PLANS. CAST IRON ROOF DRAIN WITH FLASHING RING, FLANGE, GRAVEL STOP, CAST IRON DOME, UNDER DECK CLAMP, ADJUSTABLE EXTENSION AND VANDAL PROOF SCREWES.
P-2	OVERFLOW DRAIN	WADE	3000-AE-53	ROOF	-	-	*	*SIZE AS INDICATED ON PLANS. CAST IRON ROOF DRAIN WITH FLASHING RING, FLANGE, GRAVEL STOP, CAST IRON DOME, UNDER DECK CLAMP, ADJUSTABLE EXTENSION AND VANDAL PROOF SCREWES.
P-3	CLEAN OUT TO GRADE	WADE	6000Z	TO GRADE	-	-	*	*SIZE TO MATCH WASTE LINE MAXIMUM TO 4 INCHES. PROVIDE HEAVY DUTY TRACTOR TYPE COVER.
P-4	OVERFLOW NOZZLE	WADE	WADE 3940-166	WALL	-	-	*	*SIZE TO MATCH OVERFLOW DRAIN PIPING. CAST SATIN BRONZE DOWNSPOUT NOZZLE WITH INLET AND FLANGE TO SECURE NOZZLE TO WALL. FASTENING HARDWARE TO MATCH NOZZLE. MOUNT 12" A.F.F. PROVIDE WITH BIRD SCREEN WITH MATCHING FINISH.

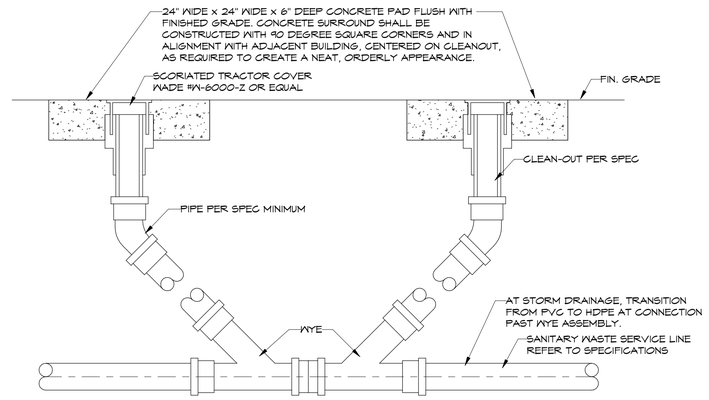

2 CLEAN OUT TO GRADE
NTS

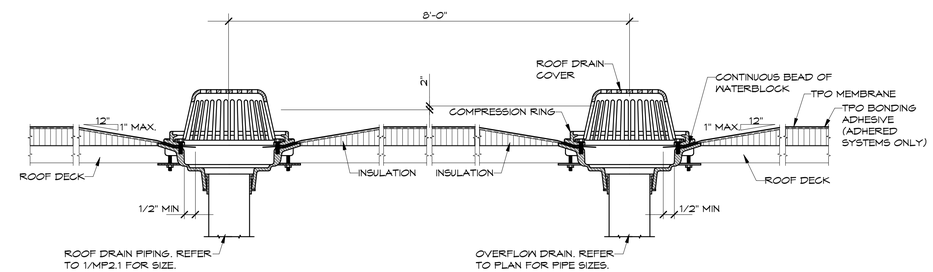

3 ROOF DRAIN DETAIL
NTS

PLUMBING LEGEND

—— RD ——	ROOF DRAIN PIPING
—— OFD ——	OVER FLOW DRAIN PIPING
—— EX RD ——	EXISTING ROOF DRAIN PIPING
—— EX OFD ——	EXISTING OVER FLOW DRAIN PIPING
—— CW ——	COLD WATER PIPING
—— EX CW ——	EXISTING COLD WATER PIPING
—— EX HW ——	EXISTING HOT WATER PIPING
—— EX V ——	EXISTING VENT PIPING
—— EX SS ——	EXISTING SANITARY WASTE PIPING
P-1	PLUMBING FIXTURE NUMBER (REFER TO PLUMBING FIXTURE SCHEDULE)
COTG	CLEAN OUT TO GRADE
WCO	WALL CLEAN OUT
RD	ROOF DRAIN
SS	SANITARY SEWER
FPHB	FREEZE PROOF HOSE BIB
OFN	OVERFLOW NOZZLE
	PIPING TO BE REMOVED
	FIXTURES TO BE REMOVED

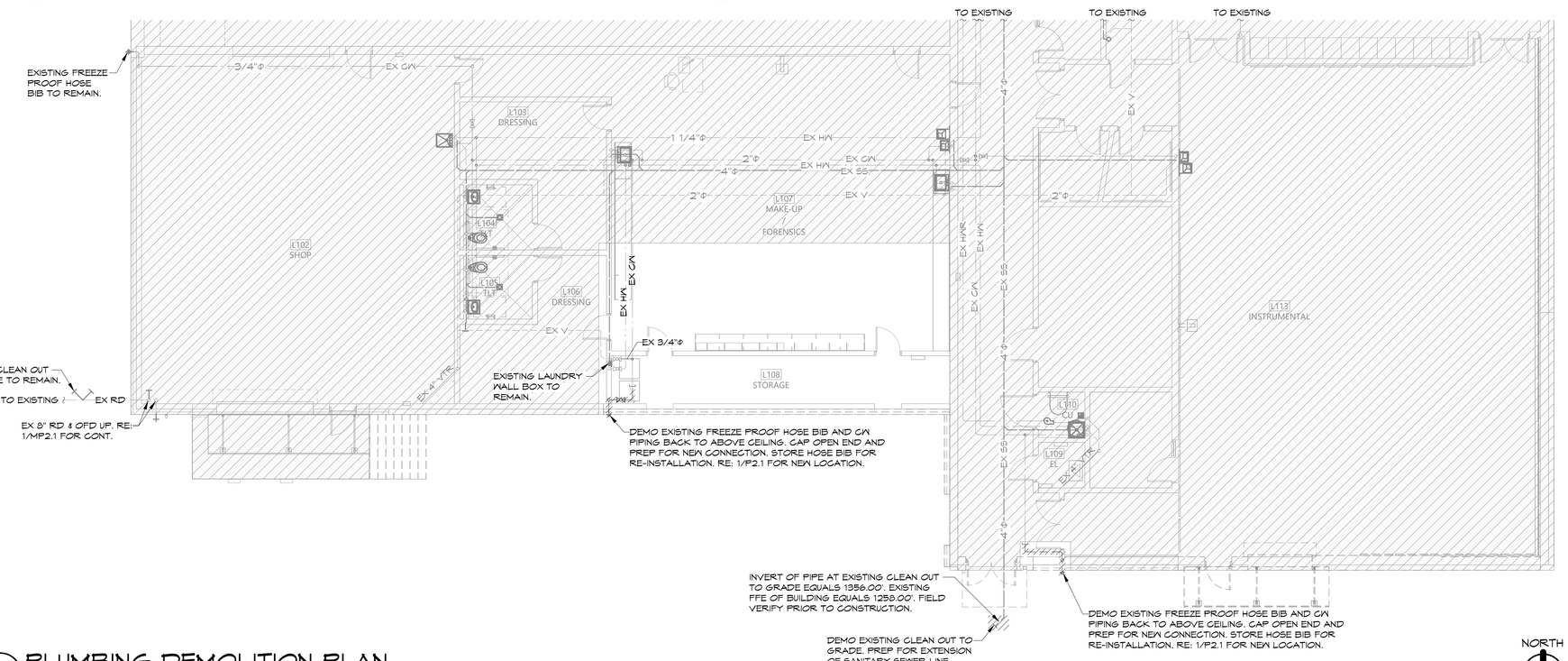

1 PLUMBING DEMOLITION PLAN
1/8" = 1'-0"

NOTE:
REFER TO SHEET P1.1 FOR PLUMBING NOTES, LEGEND, DETAILS, SCHEDULE, & DEMO PLAN. REFER TO SHEET P2.1 FOR PLUMBING PLAN & RISERS. REFER TO SHEET MP2.1 FOR MECHANICAL ROOF PLAN.

HSAEngineering
479 / 452 / 8922 office
7405 Ellis St.
Fort Smith, AR 72916
HSAConsultants.com
HSA JOB # 25-200

STATE OF ARKANSAS REGISTERED PROFESSIONAL ENGINEER No. 14057 NATHAN E. WILSON 04/06/26

Hight Jackson ASSOCIATES
5201 W Village Parkway, Suite 300 | Rogers, Arkansas 72758 | (479) 464-4965 | www.hjarch.com

An Additon for BWHS
BWHS Band Addition
1351 Gamble Rd, Centerton, AR 72719

DRAWN BY: KPH
CHECK BY: NEW
ISSUE DATE: 04/06/2026
PROJECT NO.: 2421
REVISION DATES

PLUMBING NOTES, LEGEND, DETAILS, SCHEDULE, & DEMO PLAN
SHEET
P1.1

COPYRIGHT 2026
THESE DRAWINGS AND SPECIFICATIONS ARE THE EXCLUSIVE PROPERTY OF HIGHT JACKSON ASSOCIATES PA. USE OR REPRODUCTION IS PROHIBITED WITHOUT WRITTEN CONSENT

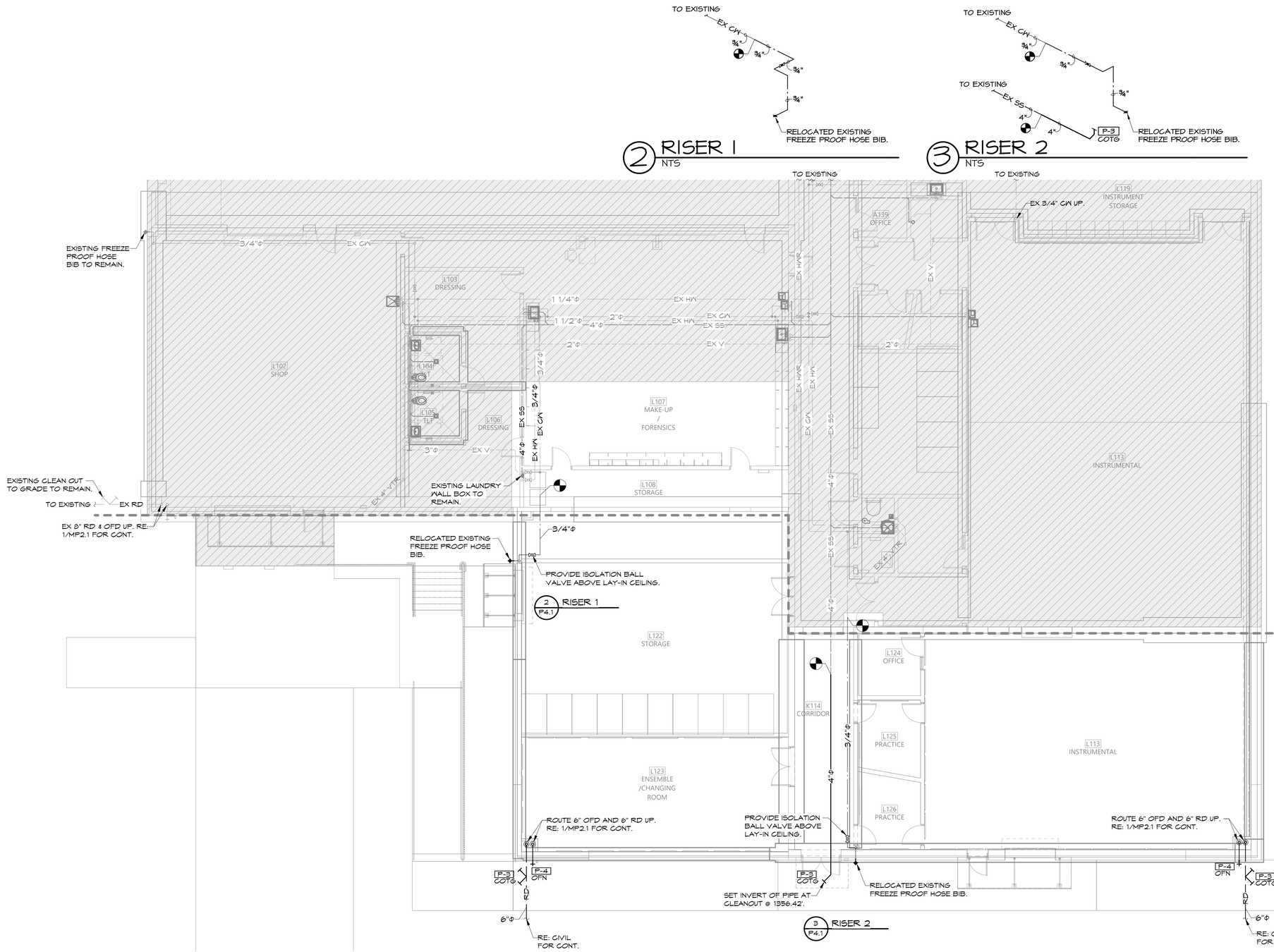

1 FIRST FLOOR PLUMBING PLAN
1/8" = 1'-0"

NOTE:
REFER TO SHEET P1.1 FOR PLUMBING NOTES, LEGEND, DETAILS, SCHEDULE, & DEMO PLAN. REFER TO SHEET P2.1 FOR PLUMBING PLAN & RISERS. REFER TO SHEET MP2.1 FOR MECHANICAL ROOF PLAN.

HSAEngineering
479 / 452 / 8922 office
7405 Ellis St.
Fort Smith, AR 72916
HSAConsultants.com

HSA JOB # 25-200

STATE OF ARKANSAS
REGISTERED PROFESSIONAL ENGINEER
No. 14057
NATHAN E. WILSON
04/06/26

Hight Jackson ASSOCIATES
5201 W Village Parkway, Suite 300 | Rogers, Arkansas 72758 | (479) 464-4965 | www.hjarch.com

An Additon for BWHS
BWHS Band Addition
13551Gamble Rd, Centerton, AR 72719

DRAWN BY: KPH
CHECK BY: NEW
ISSUE DATE: 04/06/2026
PROJECT NO. 2421
REVISION DATES

PLUMBING PLAN & RISERS

SHEET
P2.1

COPYRIGHT 2026
THESE DRAWINGS AND SPECIFICATIONS ARE THE EXCLUSIVE PROPERTY OF HIGHT JACKSON ASSOCIATES PA. USE OR REPRODUCTION IS PROHIBITED WITHOUT WRITTEN CONSENT.

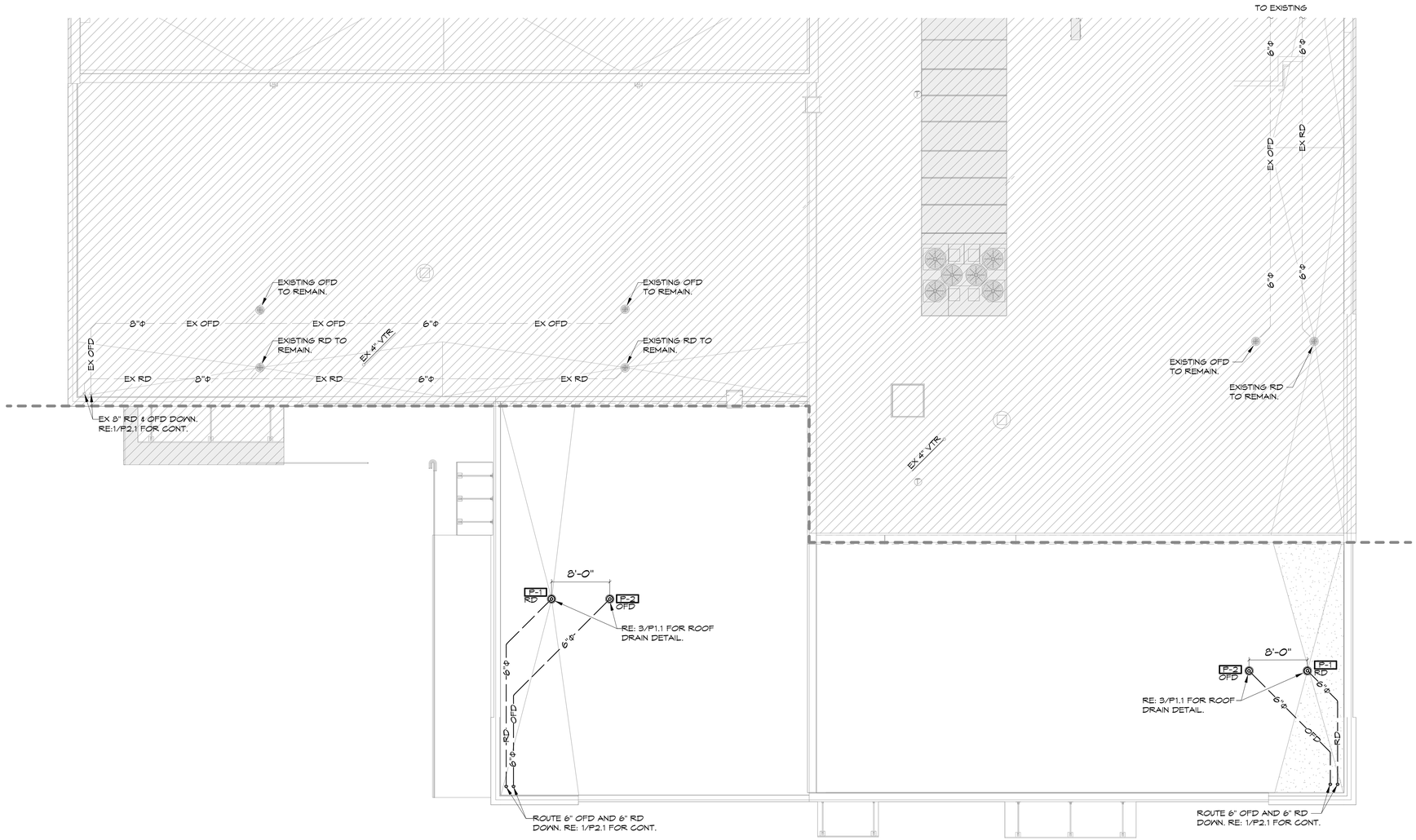

1 MECHANICAL ROOF PLAN

1/8" = 1'-0"

NORTH

NOTE:
REFER TO SHEET P1.1 FOR PLUMBING NOTES, LEGEND, DETAILS, SCHEDULE, & DEMO PLAN. REFER TO SHEET P2.1 FOR PLUMBING PLAN & RISERS. REFER TO SHEET MP2.1 FOR MECHANICAL ROOF PLAN.

HSAEngineering
479 / 452 / 8922 office
7405 Ellis St.
Fort Smith, AR 72916
HSAConsultants.com

HSA JOB # 25-200

STATE OF ARKANSAS
REGISTERED PROFESSIONAL ENGINEER
No. 14057
NATHAN E. WILSON
1/8/26

Hight Jackson ASSOCIATES
5201 W Village Parkway, Suite 300 | Rogers, Arkansas 72758 | (479) 464-4965 | www.hjarch.com

An Additon for BWHS
BWHS Band Addition
13511Gamble Rd, Centerton, AR 72719

DRAWN BY: KPH
CHECK BY: NEW
ISSUE DATE: 04/06/2026
PROJECT NO. 2421
REVISION DATES

MECHANICAL ROOF PLAN
SHEET
MP2.1

COPYRIGHT 2026
THESE DRAWINGS AND SPECIFICATIONS ARE THE EXCLUSIVE PROPERTY OF HIGHT JACKSON ASSOCIATES PA. USE OR REPRODUCTION IS PROHIBITED WITHOUT WRITTEN CONSENT.

GENERAL HVAC NOTES

1. COORDINATE GRILLE LOCATIONS WITH LIGHT FIXTURES, SPRINKLERS AND CEILING GRID.
2. INDICATED DUCT SIZES ARE NET FREE AREA.
3. ADJUST ALL AIR QUANTITIES AS SHOWN ON THE PLANS AFTER COMPLETION OF THE JOB.
4. INSULATE THE SUPPLY GRILLE TOPS, RETURN AIR GRILLE PLENUMS AND EXHAUST AIR PLENUMS WITH 2 IN., 3/4 LB DENSITY FOIL BACKED INSULATION.
5. EXTERNALLY INSULATE ALL ROUND SUPPLY AND RETURN DUCT. INTERNALLY INSULATE ALL RECTANGULAR SUPPLY AND RETURN DUCT PER MECHANICAL CODE. ATTACH THE INTERNAL INSULATION TO THE DUCT WITH APPROVED ADHESIVE AND WELDED FASTENERS.
6. MECHANICAL CONTRACTOR SHALL COORDINATE ALL DUCTWORK WITH FIELD CONDITIONS AND PROVIDE ALL OFFSETS, BENDS, TRANSITIONS AND SPECIAL FITTINGS FOR A COMPLETE INSTALLATION OF THE SYSTEMS.
7. INTERIOR OF ALL DUCT PLENUMS VISIBLE THROUGH GRILLE SHALL BE PAINTED MATTE BLACK PRIOR TO INSTALLATION.
8. USE FLANGED AND GASKETED DUCT CONSTRUCTION FOR RECTANGULAR DUCT CONVEYING AIR AT STATIC PRESSURES ABOVE 2 IN. W.G. USE LOCKED SEAM SPIRAL DUCT CONSTRUCTION FOR ROUND DUCT CONVEYING AIR AT STATIC PRESSURES ABOVE 2 IN. W.G. ALL HIGH PRESSURE DUCT CONSTRUCTION SHALL ADHERE TO SMACNA DUCT CONSTRUCTION STANDARDS (LATEST EDITION) FOR DUCT CLASSIFICATION UP TO 5 IN. W.G.
9. PAINT ALL SUPPLY AND RETURN AIR GRILLES NOT SPECIFIED AS PRE-FINISHED, TO ARCHITECT'S SPECIFICATIONS UNLESS OTHERWISE SPECIFIED.
10. INSTALL VOLUME CONTROL DAMPERS IN SUPPLY, RETURN, EXHAUST AND FRESH AIR BRANCH DUCT RUNS.
11. ALL MECHANICAL INSTALLATIONS SHALL CONFORM TO THE LATEST ACCEPTABLE MECHANICAL CODE.
12. SEAL ALL DUCT SEAMS WITH HARDCAST IRON GRIP 601 SEALANT SYSTEM OR AN APPROVED EQUAL. DUCT TAPE, WHETHER LISTED OR NOT, WILL NOT BE ACCEPTED.
13. FABRICATE AND INSTALL ALL GALVANIZED DUCT SYSTEMS TO SMACNA DUCT CONSTRUCTION STANDARDS, LATEST EDITION, AND MECHANICAL CODE.
14. FABRICATE AND INSTALL AUXILIARY CONDENSATE DRAIN PAN UNDER ENTIRE AIR HANDLER WITH CONDENSATE PAN SWITCH INTERLOCKED WITH AIR HANDLER FOR SHUT DOWN WHEN CONDENSATE OVER FLOW IS SENSED.
15. SUPPLY AIR SYSTEMS AND RETURN AIR SYSTEMS INSTALLED IN AN ATTIC, VENTILATED CRAWL SPACE OR OTHER NON-CONDITIONED AREA SHALL BE INSULATED.
16. SPRINKLER CONTRACTOR TO BE RESPONSIBLE FOR ROUTING ALL SPRINKLER PIPING TO AVOID ALL UNCONDITIONED SPACES.
17. DO NOT SCALE DIRECTLY FROM THE HVAC DRAWINGS. REFER TO ARCHITECTURAL DRAWINGS FOR ALL DIMENSIONAL INFORMATION.

MECHANICAL LEGEND

SUPPLY DUCT SECTION	SUPPLY, RETURN, OR EXHAUST DUCT
RETURN OR EXHAUST DUCT SECTION	SPIRAL SUPPLY DUCT
CEILING SUPPLY GRILLE	EXISTING SUPPLY, RETURN, OR EXHAUST DUCT
CEILING RETURN GRILLE	DEMO DUCT
CEILING EXHAUST GRILLE	OR — VOLUME DAMPER
SIDEWALL SUPPLY OR RETURN GRILLE	FLEX DUCT CONNECTION MAXIMUM OF 5 FT.
1 SEE KEYED NOTES	VAV4-25 — THERMOSTAT. MOUNT AT 48" A.F.F TO TOP (NUMBER DENOTES VAV BOX OR AIR HANDLER UNIT)

MECHANICAL PIPING LEGEND

	HOT WATER PIPING
HWR	HOT WATER RETURN PIPING
EX HWS	EXISTING HOT WATER SUPPLY PIPING
EX HWR	EXISTING HOT WATER RETURN PIPING
	PIPING TO BE REMOVED
	BALL VALVE
	CONTROL VALVE
	3-WAY CONTROL VALVE

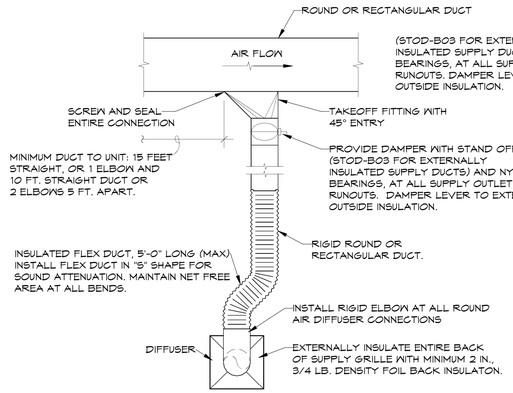

1 SUPPLY DUCT CONNECTION DETAIL
NTS

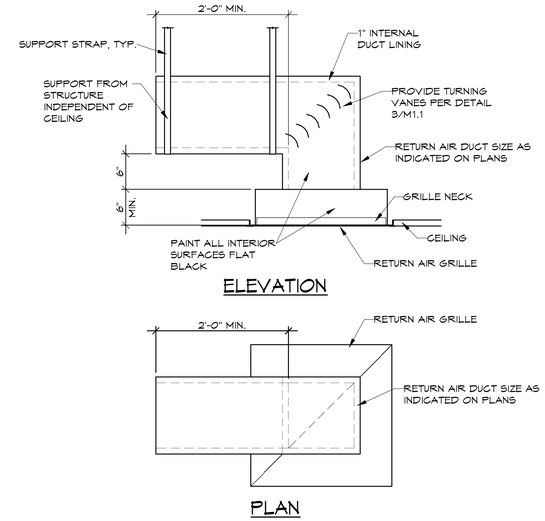

2 RETURN AIR GRILLE BOOT DETAIL
NTS

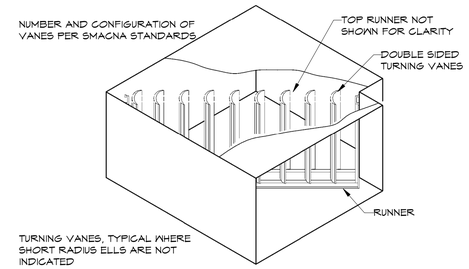

3 TURNING VANE DETAIL
NTS

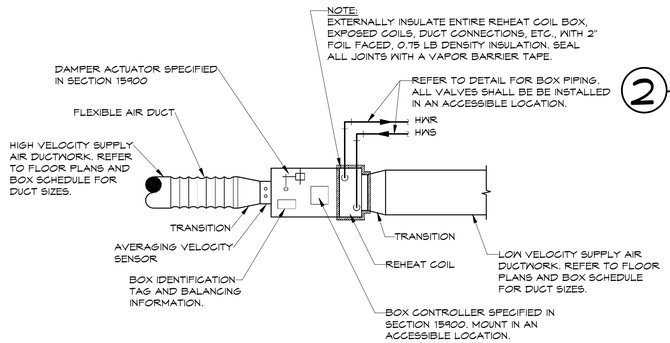

4 HOT WATER REHEAT BOX DETAIL
NTS

HANG SPIRAL DUCT IN EXPOSED AREAS USING DURO DYNE DYNA - TITE CABLE AND CABLE LOCK HANGING SYSTEM OR APPROVED EQUAL. SIZE CABLE AND SPACING PER THE HANGER MANUFACTURERS RECOMMENDATIONS. ALL SPIRAL PIPE IS DOUBLE WALL PERFORATED INNER LINER WITH 1 IN. INSULATION. COORDINATE WEIGHT OF DUCT PER FOOT WITH DUCT MANUFACTURE FOR CALCULATING HANGER SYSTEM.

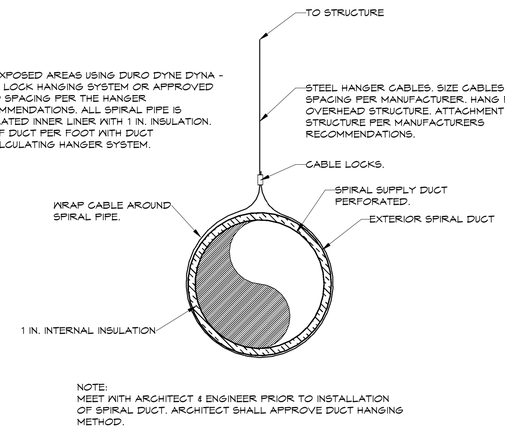

NOTE:
MEET WITH ARCHITECT & ENGINEER PRIOR TO INSTALLATION OF SPIRAL DUCT. ARCHITECT SHALL APPROVE DUCT HANGING METHOD.

6 CONCEALED SPIRAL DUCT SUPPORT DETAIL
NTS

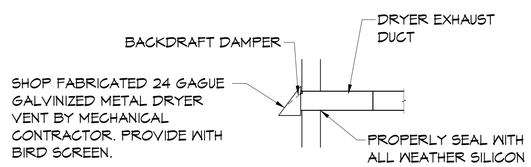

5 DRYER WALL CAP DETAIL
NTS

NOTE:
REFER TO SHEET M1.1 FOR HVAC NOTES, LEGENDS, DETAILS.
REFER TO SHEET M2.0 FOR HVAC DEMO PLANS.
REFER TO SHEET M2.1 FOR HVAC PLANS & SCHEDULES.
REFER TO SHEET M2.2 FOR MECHANICAL PIPING PLANS.

HSAEngineering
479 / 452 / 8922 office
7405 Ellis St.
Fort Smith, AR 72916
HSAConsultants.com

HSA JOB # 25-200

STATE OF ARKANSAS REGISTERED PROFESSIONAL ENGINEER No. 14057 NATHAN E. WILSON 4/6/26

Hight Jackson ASSOCIATES
5201 W Village Parkway, Suite 300 | Rogers, Arkansas 72758 | (479) 464-4965 | www.hjarch.com

An Addition for BWHS
BWHS Band Addition
1351 Gamble Rd, Centerton, AR 72719

DRAWN BY: RJK
CHECK BY: NEW
ISSUE DATE: 04/06/2026
PROJECT NO.: 2421
REVISION DATES

HVAC NOTES, LEGEND, DETAILS
SHEET
M1.1

COPYRIGHT 2026
THESE DRAWINGS AND SPECIFICATIONS ARE THE EXCLUSIVE PROPERTY OF HIGHT JACKSON ASSOCIATES PA. USE OR REPRODUCTION IS PROHIBITED WITHOUT WRITTEN CONSENT

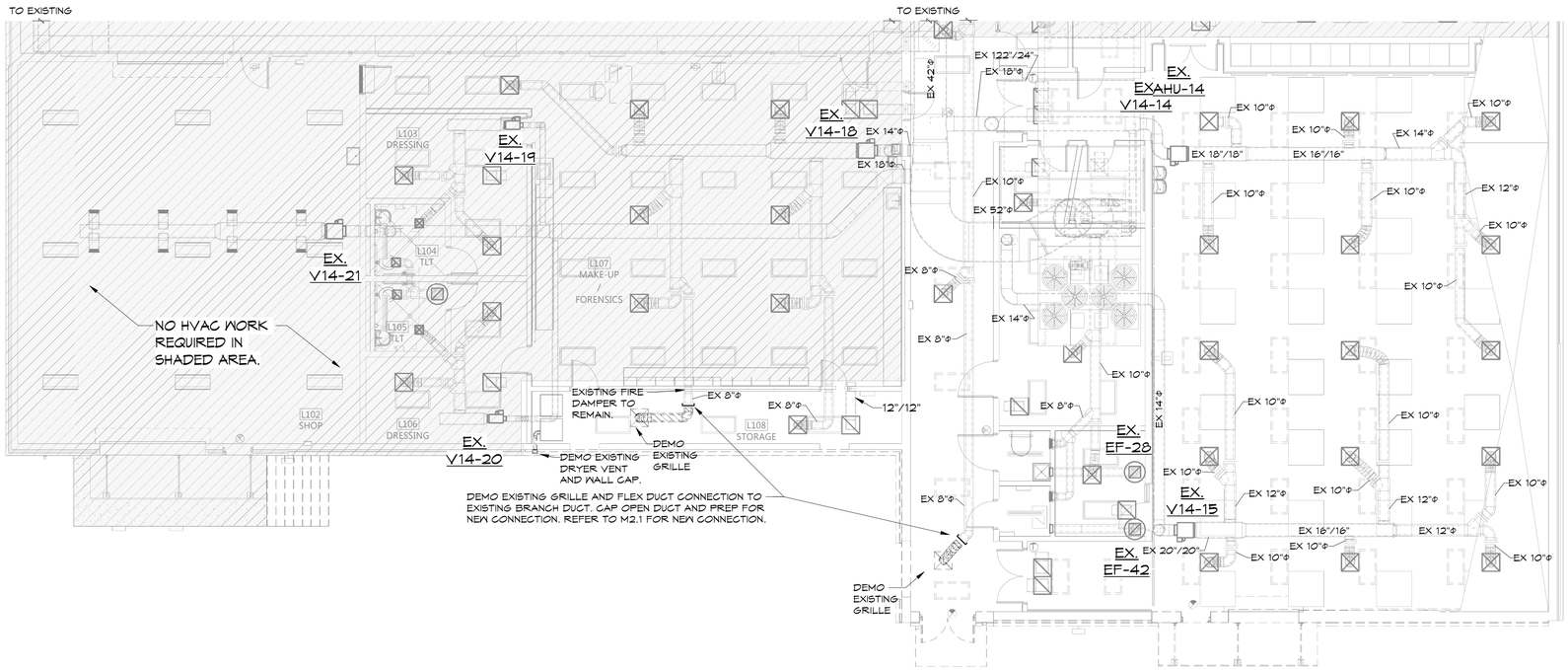

1 FIRST FLOOR - HVAC DEMO PLAN
1/8" = 1'-0"

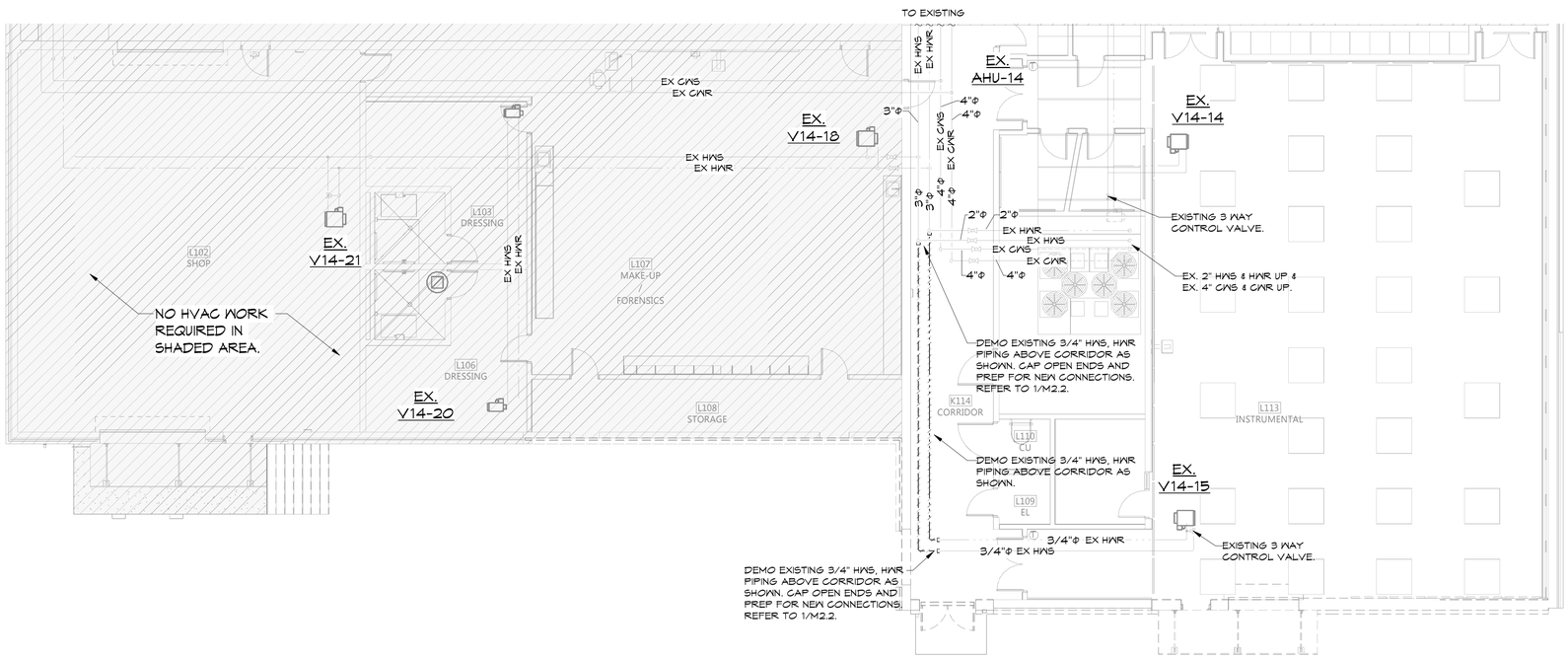

2 FIRST FLOOR - MECHANICAL PIPING DEMO PLAN
1/8" = 1'-0"

NOTE:
REFER TO SHEET M1.1 FOR HVAC NOTES, LEGENDS, DETAILS.
REFER TO SHEET M2.0 FOR HVAC DEMO PLANS.
REFER TO SHEET M2.1 FOR HVAC PLANS & SCHEDULES.
REFER TO SHEET M2.2 FOR MECHANICAL PIPING PLANS.

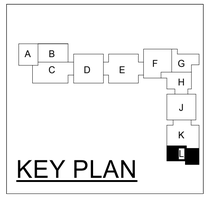

KEY PLAN

HSA Engineering
479 / 452 / 8922 office
7405 Ellis St.
Fort Smith, AR 72916
HSAConsultants.com

HSA JOB # 25-200

STATE OF ARKANSAS REGISTERED PROFESSIONAL ENGINEER No. 14057 NATHAN E. WILSON 04/06/26

Hight Jackson ASSOCIATES
5201 W Village Parkway, Suite 300 | Rogers, Arkansas 72758 | (479) 464-4965 | www.hjarch.com

An Addition for BWHS
BWHS Band Addition
1351 Gamble Rd, Centerton, AR 72719

DRAWN BY: RJK
CHECK BY: NEW
ISSUE DATE: 04/06/2026
PROJECT NO.: 2421
REVISION DATES

MECHANICAL DEMOLITION PLAN
SHEET
M2.0

COPYRIGHT 2026
THESE DRAWINGS AND SPECIFICATIONS ARE THE EXCLUSIVE PROPERTY OF HIGHT JACKSON ASSOCIATES PA. USE OR REPRODUCTION IS PROHIBITED WITHOUT WRITTEN CONSENT.

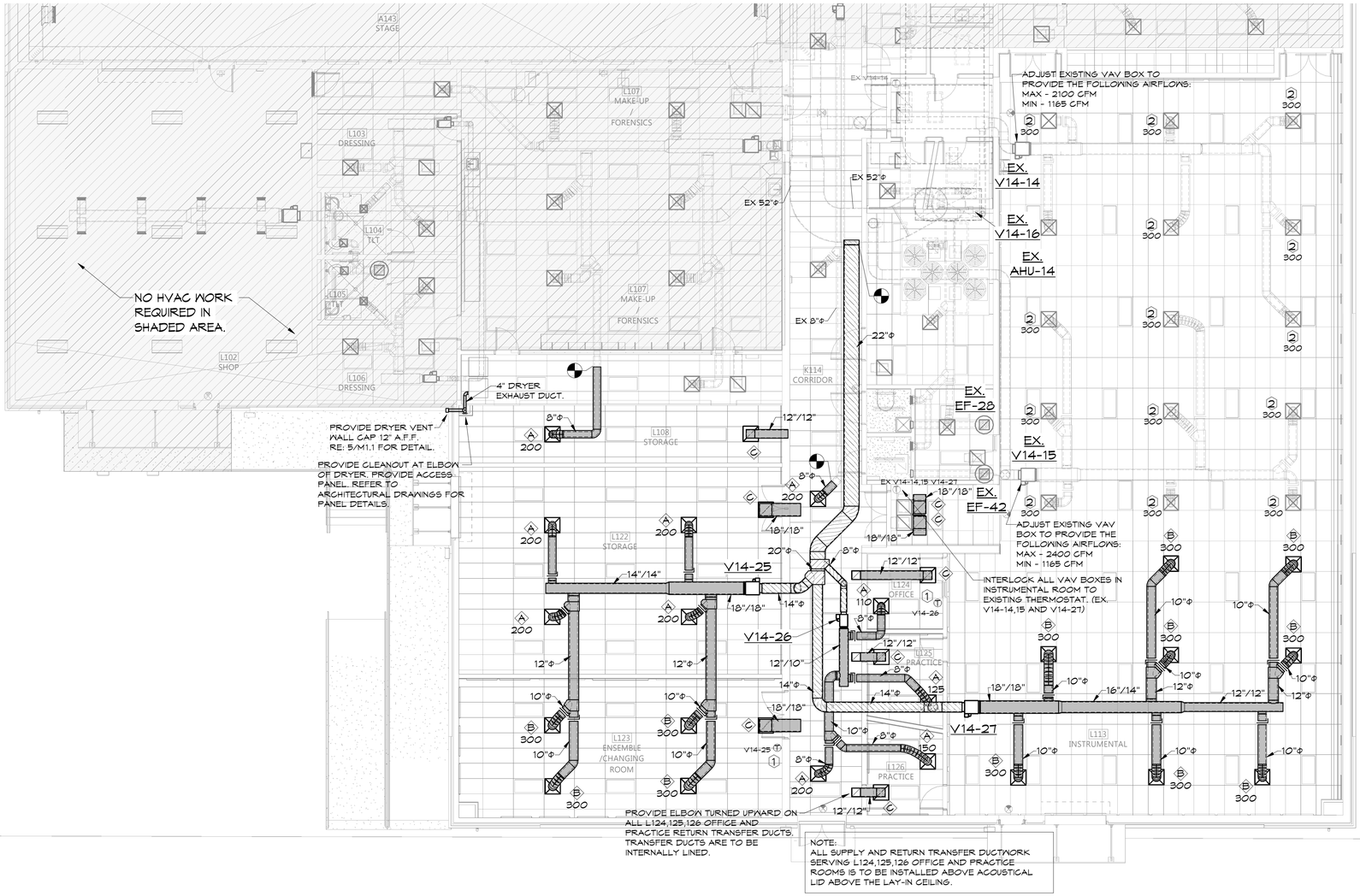

1 FIRST FLOOR HVAC PLAN

1/8" = 1'-0"

NORTH

KEYED NOTES

1. LOCATE THERMOSTAT, CO2 SENSOR OR HUMIDISTAT AS INDICATED WITH THE TOP OF THE THERMOSTAT AT 48 IN. ABOVE FINISHED FLOOR. SEAL ALL THERMOSTAT CONDUITS AT TOP AND BOTTOM OF CONDUIT. PROVIDE INSULATED BACKING FOR MOUNTING THERMOSTATS.
2. ADJUST THE EXISTING SUPPLY DIFFUSER TO PROVIDE THE LISTED CFM BELOW KEYNOTE.

VAV SCHEDULE

MARK	MFG	MODEL#	COOLING CFM	COOLING MIN CFM	COOLING INLET DIA. (IN.)	COOLING MAX A.P.D. (IN.)	HEATING WATER COIL CFM	HEATING WATER COIL ROWS	HEATING WATER COIL UNIT EAT °F	HEATING WATER COIL LAT °F	HEATING WATER COIL EWT °F	HEATING WATER COIL DELTA T °F	HEATING WATER COIL GPM	HEATING WATER COIL WPD (FT.)	HEATING WATER COIL MBH	REMARKS/ ACCESSORIES
V14-25	TRANE	VCWF14	2000	600	14	0.45	1300	3	55	105	160	130	5.03	1.27	75.4	1 THRU 10
V14-26	TRANE	VCWF08	585	200	8	0.35	250	2	55	100	160	130	0.82	0.42	12.4	1 THRU 10
V14-27	TRANE	VCWF14	2400	1165	14	0.66	1300	3	55	105	160	130	5.03	1.27	75.4	1 THRU 10

REMARKS / ACCESSORIES

1. MAX INLET VELOCITY = 2500 FT/MIN
2. BOX SHALL HAVE 1/2" FOIL FACE INTERNAL LINING.
3. DDC ACTUATOR PROVIDED BY CONTROL CONTRACTOR AND FACTORY MOUNTED.
4. PROVIDE FACTORY INSTALLED 120/24 VOLT TRANSFORMER.
5. PROVIDE HORIZONTAL HANGING KIT
6. PROVIDE AIR FLOW MEASUREMENT DEVICE.
7. MECHANICAL CONTRACTOR SHALL COMPLETELY INSULATE HEATING WATER COIL BOX, EXTERNAL PIPING, AND VALVE BODIES.
8. PROVIDE FACTORY DISCONNECT AND POWER FUSE.
9. CONTROLS CONTRACTOR SHALL PROVIDE ALL CONTROL VALVES. MECHANICAL CONTRACTOR SHALL INSTALL ALL VALVES. ALL CONTROL VALVES SHALL BE 2-WAY UNLESS INDICATED ON THE PIPING PLAN TO BE 3-WAY VALVES.
10. CONTROLS CONTRACTOR TO PROVIDE CONTROLLER TO INTEGRATE INTO EXISTING BUILDING CONTROL SYSTEM.

AIR DISTRIBUTION SCHEDULE

MARK	CFM	NECK SIZE	MFG.	MODEL	TYPE	FINISH	FRAME	REMARKS/ ACCESSIORIES
A	105-200	8"Φ	PRICE	SCD	4-WAY SUPPLY	WHITE	T-BAR LAY-IN	1
B	205-300	10"Φ	PRICE	SCD	4-WAY SUPPLY	WHITE	T-BAR LAY-IN	1
C	-	22" X 22"	PRICE	530	RETURN	WHITE	T-BAR LAY-IN	1, 2

REMARKS / ACCESSORIES

1. STEEL CONSTRUCTION
2. NO SCREW HOLES

NOTE:
REFER TO SHEET M1.1 FOR HVAC NOTES, LEGENDS, DETAILS.
REFER TO SHEET M2.0 FOR HVAC DEMO PLANS.
REFER TO SHEET M2.1 FOR HVAC PLANS & SCHEDULES.
REFER TO SHEET M2.2 FOR MECHANICAL PIPING PLANS.

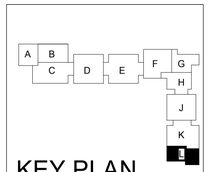

KEY PLAN

HSAEngineering
479 / 452 / 8922 office
7405 Ellis St.
Fort Smith, AR 72916
HSAConsultants.com

HSA JOB # 25-200

STATE OF ARKANSAS REGISTERED PROFESSIONAL ENGINEER No. 14057 NATHAN E. WILSON 04/06/26

Hight Jackson ASSOCIATES
5201 W Village Parkway, Suite 300 I Rogers, Arkansas 72758 I (479) 464-4965 I www.hjarch.com

An Addition for BWHS
BWHS Band Addition
1351 Gamble Rd, Centerton, AR 72719

DRAWN BY: RJK
CHECK BY: NEW
ISSUE DATE: 04/06/2026
PROJECT NO. 2421
REVISION DATES

HVAC PLAN AND SCHEDULES
SHEET
M2.1

COPYRIGHT 2026
THESE DRAWINGS AND SPECIFICATIONS ARE THE EXCLUSIVE PROPERTY OF HIGHT JACKSON ASSOCIATES, P.A. USE OR REPRODUCTION IS PROHIBITED WITHOUT WRITTEN CONSENT

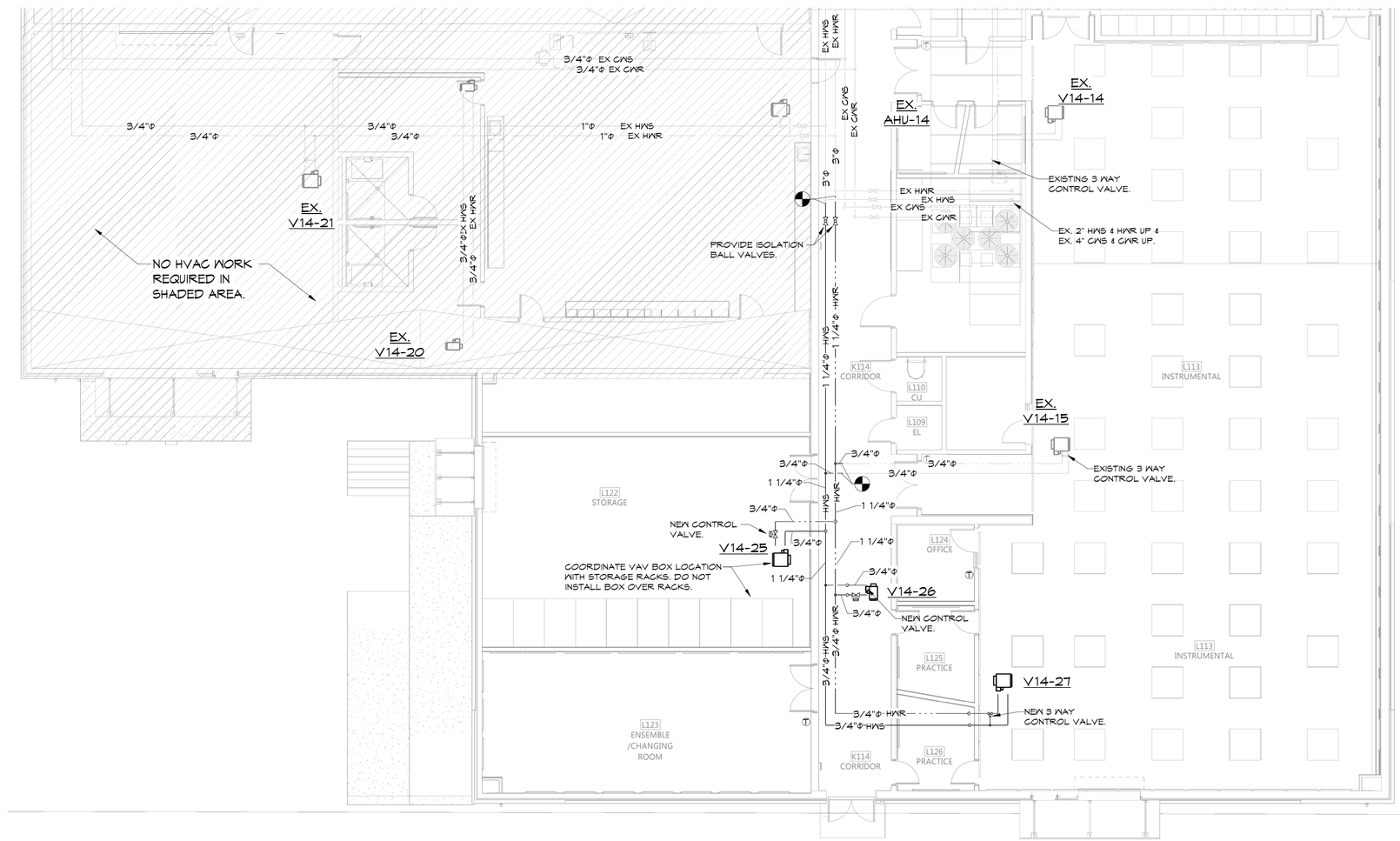

1 FIRST FLOOR MECHANICAL PIPING PLAN

1/8" = 1'-0"

NORTH

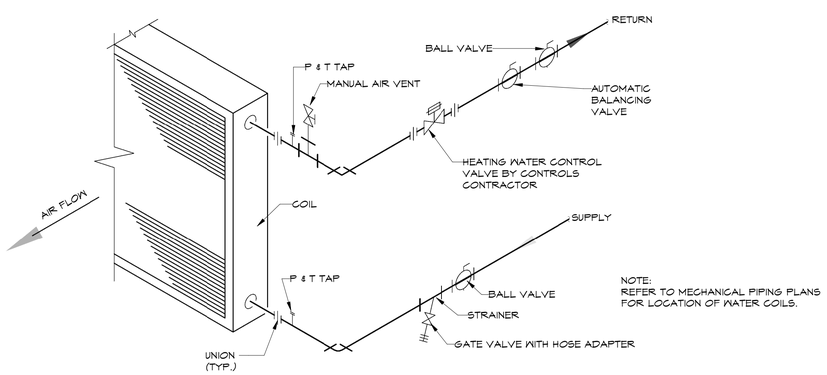

NOTE:
REFER TO MECHANICAL PIPING PLANS FOR LOCATION OF WATER COILS.

NOTE:
1. ALL OTHER PIPING ACCESSORIES SHOWN ABOVE WILL BE PROVIDED AND INSTALL BY MECHANICAL CONTRACTOR.
2. ALL CONTROL VALVES TO BE PROVIDED BY CONTROLS CONTRACTOR AND INSTALLED BY MECHANICAL CONTRACTOR.

2 COIL 2-WAY VALVE

NTS

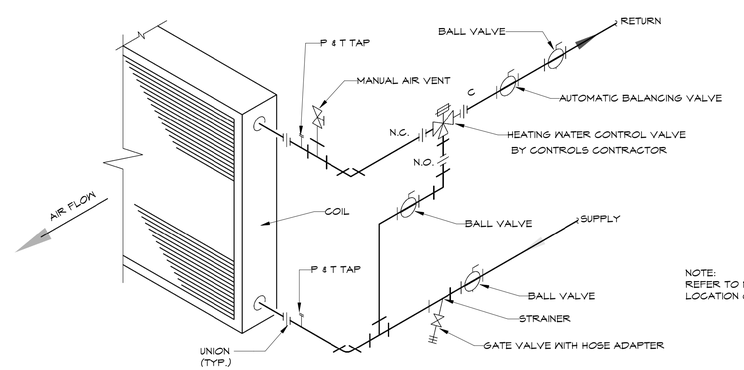

NOTE:
REFER TO MECHANICAL PIPING PLANS FOR LOCATION OF WATER COILS.

NOTE:
1. REFER TO MECHANICAL PIPING PLAN SHEETS FOR 3-WAY VALVE LOCATIONS.
2. ALL CONTROL VALVES TO BE PROVIDED BY CONTROLS CONTRACTOR AND INSTALLED BY MECHANICAL CONTRACTOR.
3. ALL OTHER PIPING ACCESSORIES SHOWN ABOVE WILL BE PROVIDED AND INSTALLED BY MECHANICAL CONTRACTOR.

3 COIL 3-WAY VALVE

NTS

NOTE:
REFER TO SHEET M1.1 FOR HVAC NOTES, LEGENDS, DETAILS.
REFER TO SHEET M2.0 FOR HVAC DEMO PLANS.
REFER TO SHEET M2.1 FOR HVAC PLANS & SCHEDULES.
REFER TO SHEET M2.2 FOR MECHANICAL PIPING PLANS.

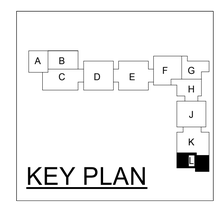

KEY PLAN

HSAEngineering
479 / 452 / 8922 office
7405 Ellis St.
Fort Smith, AR 72916
HSAConsultants.com

HSA JOB # 25-200

STATE OF ARKANSAS REGISTERED PROFESSIONAL ENGINEER No. 14057 NATHAN E. WILSON 04/06/26

HightJackson ASSOCIATES
5201 W Village Parkway, Suite 300 | Rogers, Arkansas 72758 | (479) 464-4965 | www.hjarch.com

An Additon for BWHS
BWHS Band Addition
1351Gamble Rd, Centerton, AR 72719

DRAWN BY: RJK
CHECK BY: NEW
ISSUE DATE: 04/06/2026
PROJECT NO.: 2421
REVISION DATES

MECHANICAL PIPING PLAN

SHEET M2.2

COPYRIGHT 2026
THESE DRAWINGS AND SPECIFICATIONS ARE THE EXCLUSIVE PROPERTY OF HIGHT JACKSON ASSOCIATES PA. USE OR REPRODUCTION IS PROHIBITED WITHOUT WRITTEN CONSENT.

CONTACT MATT MAHURIN WITH PRIME BUILDING SOLUTIONS FOR CONTROLS INFORMATION.
EMAIL: MATTM@PRIME-BAS.COM
PHONE: 479.644.2322

NOTE:
MECHANICAL CONTRACTOR TO COORDINATE WITH CONTROLS CONTRACTOR FOR THE INSTALLATION OF ANY REQUIRED THREDOLETS FOR CONTROLS SENSORS.

NOTE:
REFER TO DRAWINGS FOR EXACT QUANTITIES AND LOCATIONS OF HEATING WATER 3 WAY CONTROL VALVES.

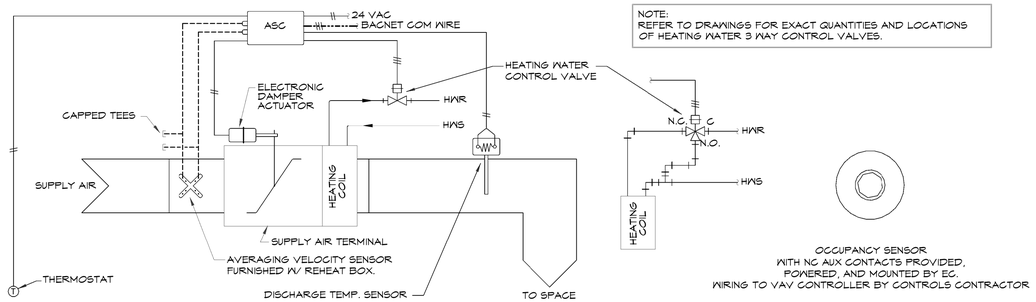

OCCUPANCY SENSOR
WITH NC AUX CONTACTS PROVIDED,
POWERED, AND MOUNTED BY EC.
WIRING TO VAV CONTROLLER BY CONTROLS CONTRACTOR

ADDITIONAL SEQUENCE REQUIREMENTS

POINTS TO BE TRENDED (IN 15 MINUTE INTERVALS):
1.VAV RTUS - DISCHARGE AIR TEMPERATURE, SUPPLY FAN STATUS, SUPPLY FAN SPEED, OSA CFM
2.CV RTUS - SPACE TEMPERATURE, SUPPLY FAN STATUS, SUPPLY AIR TEMPERATURE
3.ERV - ALL 4 TEMPERATURES AROUND WHEEL, WHEEL ON/OFF, EXHAUST AIR CFM
4.KITCHEN TEMPERATURES (FREEZER, COOLER)
5.IT ROOM SPACE TEMPERATURE

POINTS TO BE ALARMED
1.ALL DIAGNOSTICS LISTED ON CONTROL DRAWINGS
2.IT ROOM SPACE TEMPERATURE ABOVE 85 (ADUSTABLE)
3.KITCHEN FREEZER ABOVE 20 (ADJUSTABLE)
4.KITCHEN COOLER ABOVE 40 (ADJUSTABLE)
5.VAV PACKAGE UNIT DISCHARGE TEMPERATURE 7 DEGREES ABOVE SETPOINT IN COOLING MODE (ADJUSTABLE.)
6.CV PACKAGE UNIT SPACE TEMPERATURE 4 DEGREES ABOVE OR BELOW SETPOINT IN OCCUPIED MODE
7.ALL CLOGGED FILTER SWITCHES ON PACKAGE UNITS
8.ALL FAN FAILURES ON PACKAGE UNITS

GRAPHICS DESCRIPTIONS
1.GRAPHICS AS SHOWN (AIRFLOW DIAGRAMS) ON CONTROL DRAWINGS WITH LINKS TO SCHEDULE, TREND VIEW, AND FLOORPLAN
2.FLOORPLAN GRAPHIC SHOWING ALL SPACE TEMPERATURES WITH LINKS TO TREND VIEW, PIECES OF EQUIPMENT, AND SCHEDULE

SEQUENCE OF OPERATION

VAV BOX WITH REHEAT AND DDC CONTROLLER (DIRECT DIGITAL CONTROL)

A. OCCUPANCY - THE OCCUPANCY MODE CAN BE COMMUNICATED OR HARDWIRED TO THE VAV VIA A BINARY INPUT. VALID OCCUPANCY MODES FOR THE VAV SHALL BE:
1. OCCUPIED: NORMAL OPERATING MODE FOR OCCUPIED SPACES OR DAYTIME OPERATION. WHEN THE UNIT IS IN THE OCCUPIED MODE THE VAV SHALL MAINTAIN THE SPACE TEMPERATURE AT THE ACTIVE OCCUPIED HEATING OR COOLING SETPOINT. APPLICABLE VENTILATION AND AIRFLOW SETPOINTS SHALL BE ENFORCED. THE OCCUPIED MODE SHALL BE THE DEFAULT MODE OF THE VAV.
2. UNOCCUPIED: NORMAL OPERATING MODE FOR UNOCCUPIED SPACES OR NIGHTTIME OPERATION. WHEN THE UNIT IS IN UNOCCUPIED MODE THE VAV SHALL MAINTAIN THE SPACE TEMPERATURE AT THE STORED UNOCCUPIED HEATING OR COOLING SETPOINT REGARDLESS OF THE PRESENCE OF A HARDWIRED OR COMMUNICATED SETPOINT. WHEN THE SPACE TEMPERATURE EXCEEDS THE ACTIVE UNOCCUPIED SETPOINT THE VAV SHALL MODULATE FULLY CLOSED.
3. OCCUPIED BYPASS: MODE USED TO TEMPORARILY PLACE THE UNIT INTO THE OCCUPIED OPERATION. TENANTS SHALL BE ABLE TO OVERRIDE THE UNOCCUPIED MODE FROM THE SPACE SENSOR. THE OVERRIDE SHALL LAST FOR 2 HOURS (CONFIGURABLE). THE TENANTS SHALL BE ABLE TO CANCEL THE OVERRIDE FROM THE SPACE SENSOR AT ANY TIME. DURING THE OVERRIDE THE UNIT SHALL RUN IN OCCUPIED MODE.
4. OCCUPIED STANDBY: THE VAV CONTROLLER SHALL MONITOR THE EXTERNAL CONTACTS OF THE OCCUPANCY SENSOR IN THE SPACE. WHEN THE SPACE IS IN OCCUPIED MODE, BUT THE OCCUPANCY SENSOR DOES NOT DETECT OCCUPANCY, THE OUTSIDE AIR REQUIREMENT FOR THE BOX SHALL BE REDUCED TO ONLY ACCOUNT FOR THE SQUARE FOOTAGE, NOT THE OCCUPANTS AND THE SETPOINTS SHALL BE RELAXED.

B. HEAT COOL MODE - THE HEAT COOL MODE CAN BE SET BY A COMMUNICATED VALUE OR AUTOMATICALLY BY THE VAV. IN STANDALONE OR AUTO MODE THE VAV SHALL COMPARE THE PRIMARY AIR TEMPERATURE WITH THE CONFIGURED AUTO CHANGEOVER SETPOINT TO DETERMINE IF THE AIR IS "HOT" OR "COLD". HEATING MODE SHALL COMMAND THE VAV TO HEAT ONLY; IT IMPLIES THE PRIMARY AIR TEMPERATURE IS HOT. COOLING MODE COMMANDS THE VAV TO COOL ONLY; IT IMPLIES THE PRIMARY AIR TEMPERATURE IS COLD.
1. HEAT COOL SETPOINT- THE SPACE TEMPERATURE SETPOINT SHALL BE DETERMINED EITHER BY A LOCAL HARDWIRED OF A SETPOINT KNOB, THE VAV DEFAULT SETPOINT OR A COMMUNICATED VALUE. THE VAV USES THE LOCALLY STORED DEFAULT SETPOINTS WHEN NEITHER A LOCAL HARDWIRED SETPOINT NOR COMMUNICATED SETPOINT IS PRESENT. IF BOTH A HARDWIRED SETPOINT AND COMMUNICATED SETPOINT EXIST, THE VAV SHALL USE THE COMMUNICATED VALUE.

a) THE OCCUPIED HEATING AND COOLING SETPOINTS SHALL BE LIMITED BY ADJUSTABLE PARAMETERS IN THE VAV TO PREVENT THEM FROM BEING SET TOO LOW OR TOO HIGH. THESE LIMITS DO NOT APPLY IN THE UNOCCUPIED MODE. IN THE UNOCCUPIED MODE THE VAV SHALL ALWAYS USE THE STORED DEFAULT (UNOCCUPIED) SETPOINTS. THESE SETPOINTS SHALL BE WIDENED TO ACCOMMODATE NIGHT SETBACK AND SHALL BE ADJUSTABLE.

SETPOINT	DEFAULT VALUE
HEATING SETPOINT LOW LIMIT	40°F
COOLING SETPOINT LOW LIMIT	40°F
HEATING SETPOINT HIGH LIMIT	109°F
COOLING SETPOINT HIGH LIMIT	110°F

C. COOLING OPERATION - WHEN THE UNIT IS IN COOLING MODE, THE VAV SHALL MAINTAIN THE SPACE TEMPERATURE AT THE ACTIVE COOLING SETPOINT BY MODULATING THE AIRFLOW BETWEEN THE ACTIVE COOLING MINIMUM AIRFLOW SETPOINT TO THE MAXIMUM COOLING AIRFLOW SETPOINT. BASED ON THE VAV OCCUPANCY MODE, THE ACTIVE COOLING SETPOINT SHALL BE ONE OF THE FOLLOWING:

SETPOINT	DEFAULT VALUE
OCCUPIED COOLING SETPOINT	74°F
UNOCCUPIED COOLING SETPOINT	85°F
OCCUPIED STANDBY COOLING SETPOINT	78°F
OCCUPIED MIN COOLING AIRFLOW SETPOINT	SEE VAV SCHEDULE
OCCUPIED MAX COOLING AIRFLOW SETPOINT	SEE VAV SCHEDULE

THE VAV SHALL USE THE MEASURED SPACE TEMPERATURE AND THE ACTIVE COOLING SETPOINT TO DETERMINE THE REQUESTED COOLING CAPACITY OF THE UNIT. THE OUTPUTS SHALL BE CONTROLLED BASED ON THE UNIT CONFIGURATION AND THE REQUESTED COOLING CAPACITY.

D. HEATING OPERATION - WHEN THE UNIT IS IN HEATING MODE, THE ASC SHALL MAINTAIN THE SPACE TEMPERATURE AT THE ACTIVE HEATING SETPOINT BY MODULATING THE AIRFLOW BETWEEN THE ACTIVE HEATING MINIMUM AIRFLOW SETPOINT TO THE MAXIMUM HEATING AIRFLOW SETPOINT. BASED ON THE ASC OCCUPANCY MODE, THE ACTIVE HEATING SETPOINT SHALL BE ONE OF THE FOLLOWING:

SETPOINT	DEFAULT VALUE
OCCUPIED HEATING SETPOINT	71°F
UNOCCUPIED HEATING SETPOINT	60°F
OCCUPIED STANDBY HEATING SETPOINT	67°F
OCCUPIED MIN HEATING AIRFLOW SETPOINT	SEE VAV SCHEDULE
OCCUPIED MAX HEATING AIRFLOW SETPOINT	SEE VAV SCHEDULE

THE ASC SHALL USE THE MEASURED SPACE TEMPERATURE AND THE ACTIVE HEATING SETPOINT TO DETERMINE THE REQUESTED HEATING CAPACITY OF THE UNIT. THE OUTPUTS SHALL BE CONTROLLED BASED ON THE UNIT CONFIGURATION AND THE REQUESTED HEATING CAPACITY.

E. REHEAT CONTROL - REHEAT SHALL ONLY BE ALLOWED WHEN THE PRIMARY AIR TEMPERATURE IS 5°F BELOW THE CONFIGURED REHEAT ENABLE SETPOINT, [10°F] OPERATOR CONFIGURABLE. THE REHEAT WILL BE ENABLED WHEN THE SPACE TEMPERATURE DROPS BELOW THE ACTIVE COOLING SETPOINT AND THE AIRFLOW IS IN THE MINIMUM COOLING AIRFLOW SETPOINT. DURING REHEAT THE VAV SHALL OPERATE AT ITS MINIMUM HEATING AIRFLOW SETPOINT AND ENERGIZE THE HEAT AS FOLLOWS:
1. PROPORTIONAL HOT WATER REHEAT - BELOW HEATING SETPOINT MODULATE THE HOT WATER VALVE AS REQUIRED TO MAINTAIN THE ACTIVE HEATING SETPOINT.

F. THE BUILDING AUTOMATION SYSTEM (BAS) SHALL SEND THE VAV THE OCCUPIED SPACE HEATING AND COOLING TEMPERATURE SETPOINTS. THE BAS SHALL ALSO SEND THE FOLLOWING COMMANDS:

OCCUPIED
UNOCCUPIED
HEAT/COOL MODE
PRIORITY SHUTDOWN COMMANDS
IF COMMUNICATION WITH THE BAS IS LOST, THE VAV SHALL USE PREDETERMINED DEFAULT SETPOINTS AND OPERATE IN THE OCCUPIED MODE.

G. DURING BUILDING OCCUPIED HOURS, AND ROOM IS UNOCCUPIED (OCCUPANCY SENSOR), VAV BOX IS TO MODULATE TO MAINTAIN OCCUPIED TEMPERATURE SETPOINTS, BUT MIN CFM IS TO BE ZERO AND BOX IS TO BE REMOVED FROM THE RTU'S OSA CALCULATION.

SAFETIES AND ALARMS

A. SPACE SENSOR FAILURE - IF THERE IS A FAULT WITH THE OPERATION OF THE ZONE SENSOR MODULE, IT SHALL BE FEED BACK TO THE BAS. ZONE SENSOR FAILURE SHALL CAUSE THE VAV TO CLOSE AND DISABLE HEAT AND FAN IF AVAILABLE.
B. RESET - ALL DIAGNOSTICS SHALL BE CAPABLE OF BEING RESET THROUGH THE ZONE SENSOR, SERVICE TOOL, BAS, OR BY CYCLING POWER TO THE UNIT.
C. THE BAS SYSTEM SHALL PROVIDE ALARM MESSAGES FOR THE FOLLOWING VAV DIAGNOSTICS. THE VAV SHALL INITIATE A FAILSAFE OPERATIONAL SEQUENCE BASED ON THE DIAGNOSTIC CONDITION.

DIAGNOSTIC	MANUAL RESET REQUIRE
DISCHARGE AIR TEMPERATURE FAILURE	YES
LOW AIR FLOW	YES
PRIMARY AIR TEMPERATURE FAILURE	NO
SPACE TEMPERATURE FAILURE	YES
LOCAL SETPOINT FAILURE	NO
FLOW SENSOR FAILURE	NO

TROUBLESHOOTING

A. MANUAL OUTPUT TEST - THE VAV SHALL BE ABLE TO MANUALLY EXERCISE ALL OUTPUTS FOR TROUBLESHOOTING. THIS SHALL BE DONE DIRECTLY FROM THE CONTROLLER BOARD WITH NO NEED OF ADDITIONAL TOOLS.
B. UNIT IDENTIFICATION - THE VAV SHALL HAVE THE CAPABILITY OF FLASHING AN LED UPON RECEIVING A COMMAND FROM A SERVICE TOOL OR BAS. THE VAV SHALL ALSO BE ABLE TO SEND THE UNIT ADDRESS TO A SERVICE TOOL OR BAS FOR UNIT IDENTIFICATION FROM THE CONTROLLER BOARD OR SPACE SENSOR WITH NO NEED OF ADDITIONAL TOOLS.

COMMUNICATIONS

A. DATA SHARING - ALL VAVS SHALL BE ABLE TO COMMUNICATE IN A PEER-TO-PEER ENVIRONMENT OVER A TWISTED PAIR OF COMMUNICATIONS WIRE.
B. MASTER/SLAVE - MASTER/SLAVE SHALL BE USED FOR OPERATING MULTIPLE UNITS FROM A SINGLE SPACE SENSOR. THE MASTER UNIT SHALL SHARE SPACE TEMPERATURE, SETPOINT, HEAT/COOL MODE, OCCUPANCY, FAN OPERATION, AND CAPACITY CONTROL ALGORITHM DATA OVER A TWISTED PAIR OF COMMUNICATION WIRE TO ENSURE SEAMLESS COOPERATION BETWEEN THE UNITS.

1 TYPICAL VAV BOX CONTROL DIAGRAM
NTS

NOTE:
REFER TO SHEET M1.1 FOR HVAC NOTES, LEGENDS, DETAILS.
REFER TO SHEET M2.0 FOR HVAC DEMO PLANS.
REFER TO SHEET M2.1 FOR HVAC PLANS & SCHEDULES.
REFER TO SHEET M2.2 FOR MECHANICAL PIPING PLANS.

HSAEngineering
479 / 452 / 8922 office
7405 Ellis St.
Fort Smith, AR 72916
HSAConsultants.com

HSA JOB # 25-200

STATE OF ARKANSAS REGISTERED PROFESSIONAL ENGINEER No. 14057 NATHAN E. WILSON 04/06/26

HightJackson ASSOCIATES
5201 W Village Parkway, Suite 300 | Rogers, Arkansas 72758 | (479) 464-4965 | www.hjarch.com

An Addition for BWHS
BWHS Band Addition
1351Gamble Rd, Centerton, AR 72719

DRAWN BY	RJK
CHECK BY	NEW
ISSUE DATE	04/06/2026
PROJECT NO.	2421
REVISION DATES	

MECHANICAL CONTROLS

SHEET
M3.1

COPYRIGHT 2026
THESE DRAWINGS AND SPECIFICATIONS ARE THE EXCLUSIVE PROPERTY OF HIGHT JACKSON ASSOCIATES PA. USE OR REPRODUCTION IS PROHIBITED WITHOUT WRITTEN CONSENT

LEGEND

- DUPLEX RECEPTACLE (NEMA 5-20R) OR-DOUBLE DUPLEX, TAMPER RESISTANT, COMMERCIAL SPECIFICATION GRADE.
- 220 VOLT RECEPTACLE (NUMBER DENOTES AMPS)
- DUPLEX RECEPTACLE GROUND FAULT NEMA 5-20R, TAMPER RESISTANT, COMMERCIAL SPECIFICATION GRADE.
- TV — TELEVISION CABLE OUTLET BOTTOM OF BOX AT 5'-4". REQUIRES TWO RECEPTACLES, AND ONE DATA CABLE IN SEPARATE 1" CONDUIT TO ABOVE ACCESSIBLE CEILING. PROVIDE 3 GANG BACK BOX ARLINGTON #TVB5507.
- ELECTRICAL PANEL.
- DRY TYPE TRANSFORMER-480/120-208 VOLTS. PROVIDE VIBRATION-ISOLATION MOUNTING PADS.
- BRANCH CIRCUIT HOMERUN. PANEL AND CIRCUIT NUMBER INDICATED.
- WFI — WIRELESS INTERNET EQUIPMENT FURNISHED AND INSTALLED BY THE OWNER, FURNISH AND INSTALL ONE DATA CABLE.
- DATA: REQUIRES 4" SQUARE OUTLET BOX, APPROPRIATE PLASTER RING, AND 1" C. STUBBED TO AN ACCESSIBLE LOCATION ABOVE A REMOVABLE CEILING TILE. MINIMUM OF ONE DATA CABLE AT EACH LOCATION SHOWN UNLESS OTHERWISE NOTED.
- DATA MOUNTED IN CEILING FOR MICROPHONE; VERIFY REQUIREMENTS AND EXACT LOCATION WITH OWNER'S REPRESENTATIVE PRIOR TO ROUGH-IN. MINIMUM OF ONE DATA CABLE AT EACH LOCATION SHOWN UNLESS OTHERWISE NOTED. INSTALL FLUSH MOUNTED BOX WITHOUT COVER. TERMINATE RJ45 PLUG ON END OF CABLE UNLESS OTHERSIDE NOTED
- J — FLUSH MOUNTED JUNCTION BOX. VERIFY MOUNTING HEIGHT WITH MILLWORK DETAILS AND/OR THE OWNER'S REPRESENTATIVE. AT EQUIPMENT LOCATIONS VERIFY THE EXACT LOCATION WITH THE EQUIPMENT INSTALLER PRIOR TO ROUGH-IN.
- F / NF — FUSED/NON-FUSED DISCONNECT-FUSE ALL EQUIPMENT PER MANUFACTURER RECOMMENDATION FOR THE ACTUAL EQUIPMENT FURNISHED. MOUNT DISCONNECT FOR HVAC CONDENSER UNITS WITH TOP OF SWITCH AT 36" A.F.F.
- $M — MOTOR RATED SWITCH USED FOR EQUIPMENT DISCONNECTING MEANS. SINGLE PHASE: PROVIDE WITH THERMAL OVERLOAD SIZED PER MOTOR LOAD.
- $ — SWITCH TYPE 1221 ("3" INDICATES 3-WAY SWITCH, "D" INDICATES DIMMER COORDINATE WITH FIXTURE/LAMP TYPE AND CIRCUIT WATTAGE.
- $OS/D — WALL MOUNTED PASSIVE INFRARED COMBINATION MOTION SENSOR SWITCH AND SINGLE POLE WALLBOX SLIDE DIMMER. WIRE PER MANUFACTURERS RECOMMENDATION. PROVIDE CONTACTORS TO CONTROL EXHAUST FAN WITH LIGHTS. LEVITON OSD10 OR EQUAL
- OS — "OS" - CEILING MOUNTED DUAL TECHNOLOGY MOTION SENSOR PROVIDE AND INSTALL THE APPROPRIATE POWER PACK. COORDINATE SWITCHING WITH ACTUAL MOTION SENSOR USED. COORDINATE LOCATION AND NUMBER WITH ACTUAL MOTION SENSOR USED. WIRE PER MANUFACTURERS RECOMMENDATION. PROVIDE OCCUPANCY SENSOR WHICH IS THE CORRECT TYPE FOR THE SPACE. PROVIDE CONTACTORS TO CONTROL EXHAUST FAN WITH LIGHTS.
- OS — "OS" - WALL MOUNTED DUAL TECHNOLOGY MOTION SENSOR PROVIDE AND INSTALL THE APPROPRIATE POWER PACK. COORDINATE SWITCHING WITH ACTUAL MOTION SENSOR USED. COORDINATE LOCATION AND NUMBER WITH ACTUAL MOTION SENSOR USED. WIRE PER MANUFACTURERS RECOMMENDATION. PROVIDE OCCUPANCY SENSOR WHICH IS THE CORRECT TYPE FOR THE SPACE.
- EXIT LIGHT - ARROW DENOTES INCLUSION OF ARROW ON LENS. CONTRACTOR TO COORDINATE PROPER MOUNTING DETAILS.
- T — THERMOSTAT, MOUNT. @ 48" A.F.F TO CENTER OF BOX (NUMBER DENOTES HVAC UNIT).
- S CO2 — SENSOR, MOUNT @ 54" TO CENTER IN SEPARATE SINGLE GANG BOX.
- SP — EMERGENCY NOTIFICAITON SYSTEM SPEAKER. VERIFY REQUIREMENTS WITH STATE SYSTEMS-CEILING MOUNT
- CR — FLUSH MOUNTED OUTLET BOX, BOTTOM AT 48" A.F.F. FOR CARD READER. SUPPLY ¾" CONDUIT TO AN ACCESSIBLE AREA ON THE INTERIOR, AND ONE ¾" CONDUIT TO DOOR FRAME HEADER. FURNISH 120 VOLTS FROM THE NEAREST RECEPTACLE CIRCUIT. VERIFY REQUIREMENTS WITH STATE SYSTEMS.
- HP — MOTOR - VERIFY THE SIZE WITH ACTUAL EQUIPMENT FURNISHED. NUMBER REPRESENTS HORSE POWER RATING.
- PB — PUSHBUTTON PROVIDED WITH OVERHEAD DOORS PROVIDE BACK BOX AND CONDUIT AS REQUIRED.
- INSTALL FLUSH MOUNTED BOX FOR SECURITY CAMERA. PROVIDE 3/4" CONDUIT TO ABOVE AN ACCESSIBLE CEILING. COORDINATE SIZE OF BOX WITH CAMERA CONTRACTOR PRIOR TO INSTALLATION.
- X / Ex.x — DETAIL NUMBER / SHEET NUMBER

LEGEND(CONT.)

- DD — DUCT DETECTOR-FURNISHED AND INSTALLED BY THE FIRE ALARM CONTRACTOR. COORDINATE QUANTITY AND LOCATION WITH MECHANICAL PLANS.
- MANUAL PULL STATION MOUNTED MINIMUM OF 42"; MAXIMUM OF 48" A.F.F.
- SD — PHOTOELECTRIC SMOKE DETECTOR. WALL MOUNTED
- HD — HEAT DETECTOR. WALL MOUNTED
- SD — PHOTOELECTRIC SMOKE DETECTOR. CEILING MOUNTED
- HD — HEAT DETECTOR. CEILING MOUNTED
- V # — CEILING FIRE ALARM VISUAL STROBE LIGHT-WP DENOTES WEATHER RESISTANT. REQUIRES 4" SQUARE BOX WITH ¾" CONDUIT STUBBED ABOVE ACCESSIBLE CEILING. NUMBER DENOTES CANDELA RATING.
- V # — WALL MOUNT FIRE ALARM VISUAL STROBE LIGHT-WP DENOTES WEATHER RESISTANT. REQUIRES 4" SQUARE BOX WITH ¾" CONDUIT STUBBED ABOVE ACCESSIBLE CEILING. NUMBER DENOTES CANDELA RATING.
- SV # — CEILING FIRE ALARM SPEAKER/STROBE LIGHT-WP DENOTES WEATHER RESISTANT. REQUIRES 4" SQUARE BOX WITH ¾" CONDUIT STUBBED ABOVE ACCESSIBLE CEILING. NUMBER DENOTES CANDELA RATING.
- SV # — WALL MOUNT FIRE ALARM SPEAKER/STROBE LIGHT-WP DENOTES WEATHER RESISTANT. REQUIRES 4" SQUARE BOX WITH ¾" CONDUIT STUBBED ABOVE ACCESSIBLE CEILING. NUMBER DENOTES CANDELA RATING.

SUBSCRIPTS:

- C = COORDINATE LOCATION WITH MILLWORK-MOUNTING HEIGHTS VARY. REFER TO THE ARCHITECTURAL MILLWORK DRAWINGS.
- W = WALL MOUNTED @ 48" A.F.F.-OR AS SHOWN.
- GFI = GROUND FAULT CIRCUIT INTERRUPTER.
- WP = WEATHER RESISTANT RECEPTACLES ARE "GFI", WITH METAL WEATHER RESISTANT "WHILE-IN-USE" COVERS.
- EM = FIXTURE CONTAINS EMERGENCY BATTERY PACK.
- H = MOUNT HORIZONTALLY IN MILLWORK.
- EC = ELECTRICAL CONTRACTOR
- AFF = ABOVE FINISHED FLOOR
- AFG = ABOVE FINISHED GRADE
- EWC = ELECTRIC WATER COOLER
- EWH = ELECTRIC WATER HEATER
- NTS = NOT TO SCALE
- ER = EXISTING TO REMAIN
- RE = REMOVE EXISTING
- RRE = REMOVE AND RELOCATE EXISTING
- S = SURFACE MOUNT

GENERAL ELECTRICAL NOTES-ALL SHEETS
THESE NOTES ARE ONLY A SUPPLEMENT TO THE SPECIFICATIONS

1. THE ELECTRICAL CONTRACTOR IS RESPONSIBLE FOR A COMPLETE WORKING INSTALLATION.
2. THIS CONTRACTOR IS TO COMPLY WITH THE STATE OF ARKANSAS ADOPTED ADA ACCESSIBLE GUIDELINES IN REGARD TO ACCESSIBLE FEATURES.
3. AT ALL MILLWORK LOCATIONS COORDINATE THE ELECTRICAL INSTALLATION WITH THE ARCHITECTURAL DRAWINGS.
4. PROVIDE FIRE RATED CAULKING WHERE CONDUIT OR OTHER ELECTRICAL ITEMS PASS THOUGH FIRE-RATED WALLS, CEILINGS AND FLOORS.
5. INSTALL ALL CONDUIT STRAIGHT AND PARALLEL WITH THE BUILDING LINES. ALL CONDUIT IS CONCEALED IN PUBLIC PLACES.
6. THE ELECTRICAL CONTRACTOR IS RESPONSIBLE FOR ALL PERMIT AND FEE COSTS AND SHALL INCLUDE THESE COSTS IN THE BID PRICE FOR THIS PROJECT.
7. THE ENTIRE ELECTRICAL INSTALLATION SHALL CONFORM TO THE LATEST ADOPTED EDITION OF THE NATIONAL ELECTRICAL CODE AND ALL APPLICABLE LOCAL CODES AND ORDINANCES. IF A CONFLICT IS FOUND BETWEEN APPLICABLE CODES, THE MORE STRINGENT SHALL APPLY. THE CONTRACTOR SHALL BE COMPLETELY FAMILIAR WITH ALL APPLICABLE MUNICIPAL CODES AND ORDINANCES.
8. THE SUBMISSION OF A PROPOSAL WILL BE CONSIDERED EVIDENCE THAT THE CONTRACTOR HAS FAMILIARIZED THEMSELVES WITH THE DRAWINGS, SPECIFICATION BOOK, THE BUILDING SITE AND OTHER INFORMATION PRESENTED FOR THE CONSTRUCTION OF THIS PROJECT. CLAIMS MADE SUBSEQUENT TO THE PROPOSAL FOR MATERIALS AND LABOR BECAUSE OF DIFFICULTIES ENCOUNTERED WILL NOT BE RECOGNIZED IF THEY COULD HAVE BEEN FORESEEN HAD A COMPLETE AND THOROUGH EXAMINATION BEEN MADE.
9. DO NOT SCALE DIRECTLY FROM THE ELECTRICAL DRAWINGS. REFER TO THE ARCHITECTURAL DRAWINGS FOR DIMENSIONAL INFORMATION.
10. THE CONTRACTOR SHALL GUARANTEE ALL WORK FOR WHICH MATERIALS ARE FURNISHED, FABRICATED OR FIELD ERECTED. THIS CONTRACTOR GUARANTEE SHALL EXIST FOR A PERIOD OF ONE YEAR FROM THE DATE OF FINAL OWNER ACCEPTANCE OF THE WORK AND SHALL APPLY TO ALL DEFECTS IN MATERIALS AND/OR WORKMANSHIP OF ANY KIND.
11. WHERE JOB CONDITIONS REQUIRE CHANGES FROM THE CONTRACT DOCUMENTS THAT DO NOT CHANGE THE SCOPE OR NATURE OF THE WORK REQUIRED, THE CONTRACTOR SHALL MAKE SUCH CHANGES WITHOUT ADDITIONAL COST TO THE OWNER. NO OTHER CHANGES WILL BE MADE WITH OUT THE EXPRESSED WRITTEN CONSENT OF THE OWNER.
12. IT IS THE RESPONSIBILITY OF THE ELECTRICAL CONTRACTOR TO COORDINATE WITH ALL OTHER TRADES TO INSURE THAT ALL CIRCUITS AND DEVICES ARE OF A PROPER SIZE FOR ACTUAL EQUIPMENT FURNISHED. THE ENGINEER SHALL BE NOTIFIED OF ANY CONFLICT WHICH CAUSES CHANGES TO ANY SYSTEM AS DESIGNED ON THESE DRAWINGS. FAILURE ON THE PART OF THE CONTRACTOR TO NOTIFY THE ENGINEER OR ARCHITECT OF SUCH CONFLICTS PLACES THE SUBSEQUENT CHANGES UPON THE CONTRACTOR.
13. CONDUIT FOR FLOOR BOXES IS TO BE INSTALLED UNDER THE SLAB, UP INTO THE BOTTOM OF THE FLOOR BOX. NO CONDUIT IS TO BE INSTALLED IN THE SLAB.
14. WHEN INSTALLING POLE BASES OR UNDERGROUND UTILITIES, FIELD VERIFY THE LOCATION OF EXISTING UNDERGROUND UTILITIES. EXACT LOCATION OF POLE BASES AND CONDUIT TO BE DETERMINED IN THE FIELD.
15. THE ELECTRICAL CONTRACTOR IS TO PROVIDE, AT YET TO BE DECIDED LOCATIONS,TWENTY (20) CONDUIT STUB-UPS, WHICH ARE TO INCLUDE 4" OUTLET BOXES, PLASTER RINGS, COVER PLATES, AND CONDUIT TO ABOVE THE CEILING, TEN ONE GANG AND TEN TWO GANG. IN ADDITION, PROVIDE TWENTY (20) SINGLE GANG STUB-UPS WHICH ARE TO INCLUDE 4" OUTLET BOXES, PLASTER RINGS, COVER PLATES, INCLUDING ONE RECEPTACLE OR SWITCH WITH 50 FEET OF CIRCUIT WIRING PER SINGLE GANG STUB-UP. COMBINED TOTAL NUMBER OF STUB-UPS REQUIRED IS FORTY (40).
16. ALLOW FOR THE ADDITION OF 2 (TWO) NEW EXIT LIGHTS WITH WIRING TO UNSWITCHED LIGHTING CIRCUIT.
17. ELECTRICAL CONTRACTOR AND MASON TO COORDINATE LOCATION OF ALL WALL INSTALLED DEVICES WITH ARCHITECTURAL FINISHES SUCH AS ACOUSTIC WALL PANELS, WALL FURR OUTS, DOOR LOCATIONS, SIGNAGE.
18. THE ELECTRICAL CONTRACTOR IS RESPONSIBLE FOR THE FOLLOWING SYSTEMS:

A. POWER AND LIGHTING:

1. ALL DEVICE PLATES ARE STAINLESS STEEL. COORDINATE COLOR OF DEVICES WITH THE ARCHITECT.
2. ALL 20A 120V AND 250V NON-LOCKING TYPE RECEPTACLES, UNLESS OTHERWISE NOTED, SHALL BE TAMPER RESISTANT TYPE PER NEC 406.12.
3. WHERE DEVICES ARE SHOWN NEXT TO EACH OTHER, THEY ARE INTENDED TO BE GANGED. FIELD VERIFY ACTUAL SPACE AVAILABLE AND NOTIFY THE ARCHITECT WHERE THERE ARE SPACE CONFLICTS.
4. LOW VOLTAGE WIRING IS TO BE ENCASED IN CONDUIT IN AREAS WITH NO CEILING.
5. RECEPTACLES FOR EQUIPMENT SUCH AS ELECTRIC WATER COOLERS SHALL BE LOCATED IN THE WALL AT A LOCATION WHICH IS CONCEALED BY THE EQUIPMENT CABINET.
6. ALL EMPTY CONDUITS ARE TO CONTAIN A NYLON PULL STRING. EMPTY CONDUITS 2" AND LARGER ARE TO BE SNABBED OUT AND LEFT WITH A NYLON PULL ROPE FOR THE USE OF THE OWNER.
7. COORDINATE THE EXACT LOCATION OF ALL FLOOR BOXES WITH THE ARCHITECT AND THE ARCHITECTURAL DRAWINGS.
8. COVER PLATES FOR EXTERIOR RECEPTACLES ARE TO BE METAL, WEATHER PROOF WHILE IN USE.
9. ELECTRICAL CONTRACTOR TO PROVIDE AND INSTALL DRIVER AND LAMP COMBINATIONS THAT WILL PROVIDE THE OWNER WITH A FIVE YEAR WARRANTY ON THE DRIVER.
10. COORDINATE WITH THE GENERAL CONTRACTOR AND THE INSULATION CONTRACTOR TO HOLD THE BATT INSULATION AWAY FROM ALL LAY-IN FIXTURES. CLEARANCE SHOULD BE 3" ON ALL SIDES, AND TOTALLY CLEAR ON THE TOP.
11. ROOM NUMBERS USED IN THE PANEL SCHEDULES ARE TO REFLECT ROOM NUMBERS BY THE OWNER. ARCHITECT WILL PROVIDE CROSS OVER LIST DURING THE PROJECT.
12. OCCUPANCY SENSORS ARE TO BE LAID OUT BY THE LIGHTING REPRESENTATIVE FURNISHING THE EQUIPMENT HSA WILL PROVIDE AUTO CAD DRAWINGS AS NECESSARY. ELECTRICAL CONTRACTOR RESPONSIBLE FOR LOCATION DETAILS AND MOUNTING. SENSORS SHOWN ARE FOR REFERENCE ONLY.
13. WIRE SIZES:

WIRE SIZE 120V	WIRE SIZE 277V
A. #12 LESS THAN 75 FEET	LESS THAN 150 FEET
B. #10 BETWEEN 75-150 FEET	BETWEEN 150-300 FEET
C. #8 BETWEEN 150-250 FEET	BETWEEN 300-450 FEET
D. #6 BETWEEN 250-375 FEET	BETWEEN 450-700 FEET

GENERAL ELECTRICAL NOTES (CONTINUED.)

B. FIRE ALARM

1. ALL FIRE ALARM OUTLET BOXES ARE TO BE PAINTED RED.
2. ALL NEW DEVICES MUST BE COMPATIBLE AND CONNECT TO THE EXISTING FIRE ALARM SYSTEM.
3. INSTALL FIRE ALARM SYSTEM PER N.F.P.A. AND ALL STATE AND LOCAL ORDINANCES.
4. COORDINATE THE OVERALL FIRE ALARM SYSTEM WITH THE FIRE MARSHAL, FURNISHING ALL DEVICES AND SYSTEMS NECESSARY FOR A COMPLETE ACCEPTABLE SYSTEM. NO EXTRA CHARGES WILL BE ALLOWED, OUTSIDE OF THE CONTRACT PRICE. THE FIRE ALARM CONTRACTOR IS TO SUBMIT PLANS TO THE FIRE MARSHAL FOR FINAL APPROVAL PRIOR TO BEGINNING CONSTRUCTION.
5. DUCT DETECTORS ARE SUPPLIED AND INSTALLED BY THE FIRE ALARM CONTRACTOR. IT IS THE RESPONSIBILITY OF THE FIRE ALARM CONTRACTOR TO FURNISH ALL WIRING NECESSARY TO CONNECT THESE DEVICES TO THE FIRE ALARM SYSTEM. PROVIDE WITH REMOTE INDICATOR OR SEPARATELY ZONED. COORDINATE QUANTITY AND LOCATION WITH THE MECHANICAL DRAWINGS.
6. STATE SYSTEMS IS TO PROVIDE AND INSTALL FIRE ALARM SYSTEM THROUGH THE OWNER. REFER TO PLANS AND SPECIFICATIONS FOR EXACT REQUIREMENTS

C. CONDUIT AND CABLE SYSTEM FOR DATA AND TELEPHONE WIRING.

1. CONDUIT FOR DATA AND TELEPHONE SYSTEM, TO INCLUDE SLEEVES IN FIRE WALLS.
2. DATA OUTLETS IN THE FLOOR REQUIRE 1" CONDUIT FROM EACH ONE TO A POINT ABOVE AN ACCESSIBLE CEILING. NO DAISY CHAINING OF DATA OUTLETS/CONDUITS IS ALLOWED.
3. CABLE IS NOT TO BE INSTALLED EXPOSED. VERIFY WITH MECHANICAL PLANS FOR PLENUM SPACES CABLE IN THESE AREAS IS PLENUM RATED.
4. ELECTRICAL CONTRACTOR IS TO PROVIDE, INSTALL AND TERMINATE ALL DATA/TELEPHONE WIRING. REFER TO SPECIFICATIONS FOR EXACT REQUIREMENTS.

D. GROUNDING SYSTEM

1. ALL CONDUITS ARE TO CONTAIN A GREEN GROUNDING CONDUCTOR, SIZED PER THE N.E.C.

E. EQUIPMENT REQUIREMENTS:

1. VERIFY EXACT FUSE SIZE AND EQUIPMENT REQUIREMENTS WITH THE ACTUAL EQUIPMENT FURNISHED BY THE OTHER CONTRACTORS.
2. ALL HOT WATER CIRCULATION PUMPS ARE TO BE CONTROLLED VIA 7 DAY TIME CLOCKS PROVIDED BY THE MECHANICAL CONTRACTOR.
3. FINAL EQUIPMENT CONNECTIONS: THE ELECTRICAL CONTRACTOR IS RESPONSIBLE FOR PROVIDING ALL LABOR AND MATERIALS REQUIRED TO MAKE FINAL ELECTRICAL CONNECTIONS TO ALL EQUIPMENT FURNISHED ON THIS PROJECT. VERIFY ALL REQUIREMENTS, CONDUCTOR SIZES, OVERCURRENT PROTECTION, PHASES, VOLTAGES, MOTOR ROTATION, ETC., WITH THE EQUIPMENT SUPPLIER PRIOR TO ROUGH-IN. PROVIDE FUSED DISCONNECT IF REQUIRED BY MANUFACTURER. FURNISH HARD WIRING FOR ALL WATER HEATERS AND CIRCULATION PUMPS.
4. THE ELECTRICAL CONTRACTOR IS TO PROVIDE ALL CONTACTORS, MAGNETIC STARTERS, AND MISCELLANEOUS WIRING NECESSARY TO CONTROL EXHAUST FANS AND OTHER AUTOMATICALLY OPERATED EQUIPMENT. THE CONTROLS CONTRACTOR IS TO FURNISH ONE RELAY PER ITEM AS COMPATIBLE WITH THEIR CONTROL SYSTEM.

F. HVAC CONTROL:

1. THE ELECTRICAL CONTRACTOR SHALL PROVIDE CONDUIT FROM EACH HVAC UNIT TO ITS RESPECTIVE THERMOSTAT, HUMIDSTAT, AND/OR SENSOR, AS REQUIRED. COORDINATE EXACT LOCATIONS WITH MECHANICAL CONTRACTOR AND ARCHITECT PRIOR TO ROUGH-IN.
2. THE ELECTRICAL CONTRACTOR SHALL PROVIDE ALL CONDUIT AND WIRING NECESSARY FOR LINE VOLTAGE CONTROL SYSTEMS.
3. ALL LOW VOLTAGE CONTROL WIRING SHALL BE ENCLOSED IN CONDUIT IN SPACES WITH NO CEILING
4. COORDINATE ALL HVAC WIRING WITH THE MECHANICAL DRAWINGS AND THE MECHANICAL CONTRACTOR.
5. THE ELECTRICAL CONTRACTOR IS TO PROVIDE A MAGNETIC STARTER FOR EACH EXHAUST FAN. THIS STARTER IS CONTROLLED BY THE LIGHTING/MOTION SENSOR SYSTEM.
6. THE ELECTRICAL CONTRACTOR IS TO PROVIDE AND INSTALL ALL LINE VOLTAGE THERMOSTATS.

G. ACCESS CONTROL:

1. THE ELECTRICAL CONTRACTOR IS RESPONSIBLE FOR ALL BOXES AND CONDUIT FOR THE CARD READER STUB UPS. CONTRACTOR IS ALSO RESPONSIBLE FOR PROVIDING 120 VOLT POWER TO EACH ACCESS CONTROL CABINET AND AT EACH DOOR. CONDUIT AT DOORS WITH LOCKS IS TO BE INSTALLED CONCEALED IN THE WALL.
2. STATE STSTEMS IS TO PROVIDE AND INSTALL ACCESS CONTROL SYSTEMS THROUGH THE OWNER.

HSAEngineering
479 / 452 / 8922 office
7405 Ellis St.
Fort Smith, AR 72916
HSAConsultants.com
HSA JOB # 25-200

STATE OF ARKANSAS REGISTERED PROFESSIONAL ENGINEER No.16929 MICHAEL T. RICHOLD 4-6-2026

HightJackson ASSOCIATES
5201 W Village Parkway, Suite 300 | Rogers, Arkansas 72758 | (479) 464-4965 | www.hjarch.com

An Addition for BWHS
BWHS Band Addition
1351 Gamble Rd, Centerton, AR 72719

DRAWN BY	G.S.
CHECK BY	M.T.R.
ISSUE DATE	04/06/2026
PROJECT NO.	2421
REVISION DATES	

ELECTRICAL LEGEND, NOTES, AND DETAILS

SHEET

E1.1

COPYRIGHT 2026
THESE DRAWINGS AND SPECIFICATIONS ARE THE EXCLUSIVE PROPERTY OF HIGHT JACKSON ASSOCIATES PA USE OR REPRODUCTION IS PROHIBITED WITHOUT WRITTEN CONSENT

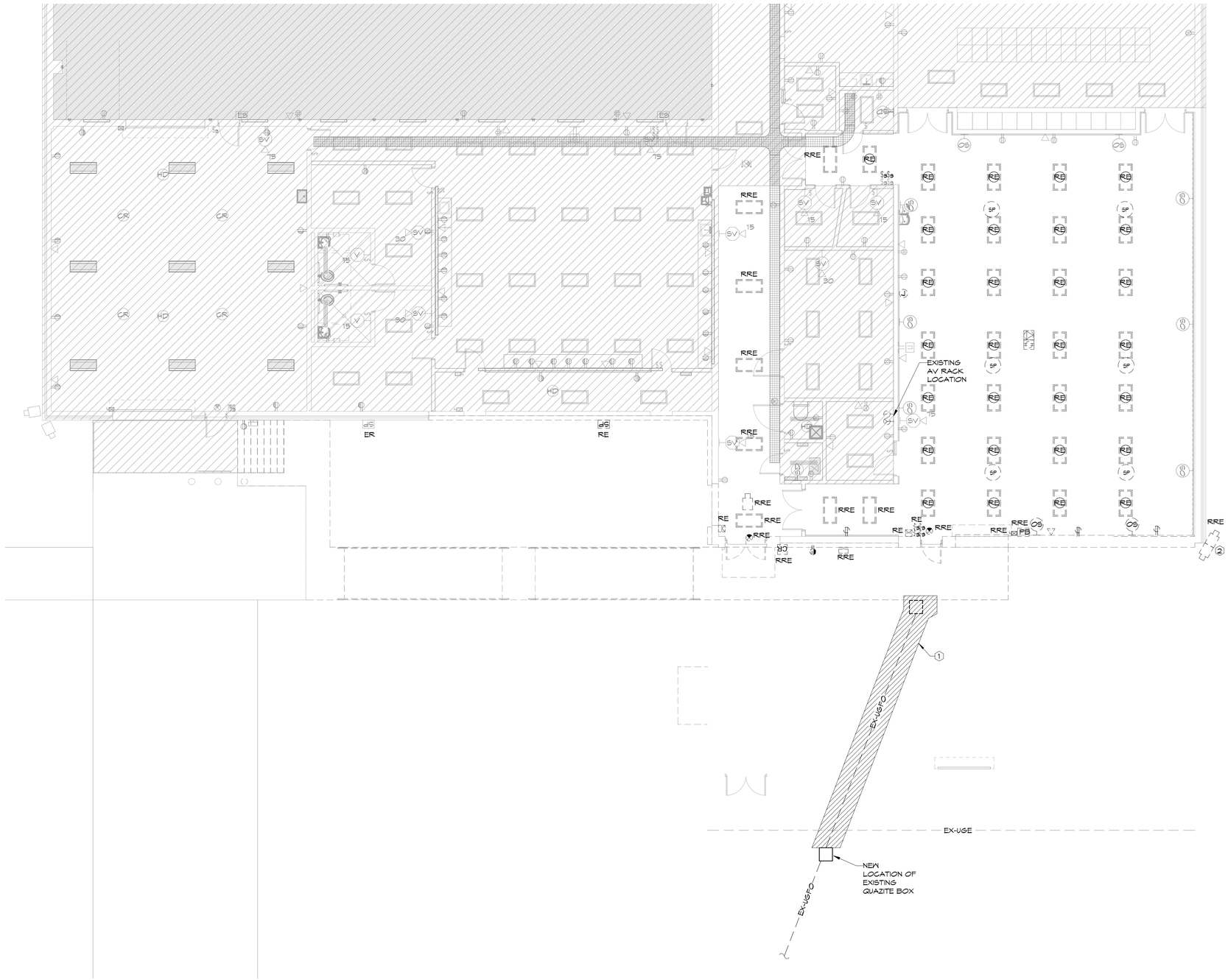

1 ELECTRICAL DEMOLITION PLAN

1/8" = 1'-0"

NORTH

ELECTRICAL DEMO GENERAL NOTES

1. FOR ALL DEVICES IN WALLS/MILLWORK BEING DEMOLISHED: DISCONNECT REMOVE CONDUIT AND WIRE BACK TO JUNCTION POINT. MAINTAIN CONTINUITY TO REMAINING DEVICES ON THAT CIRCUIT.
2. FOR ALL UNUSED CIRCUITS, REMOVE CONDUIT AND WIRE BACK TO SOURCE, LABEL BREAKER AS SPARE.
3. REFER TO ARCHITECTURAL DRAWINGS FOR AREAS TO BE DEMOLISHED
4. GRAYED OUT DEVICES SHOW EXISTING TO REMAIN DEVICE LOCATIONS.
5. DEVICES SHOWN AS BOLD OR DASHED ARE TO BE REMOVED AND DISPOSED OF UNLESS OTHERWISE NOTED.
6. REMOVE POWER TO ALL EXISTING EQUIPMENT TO BE DEMOLISHED, COORDINATE WITH ALL TRADES.
7. EXISTING LIGHT FIXTURES LABELED "RRE": REMOVE, PROTECT, AND STORE ON SITE. LOCATE AS SHOWN ON LIGHTING PLANS. REPLACE ALL EXISTING BROKEN OR DISCOLORED LIGHT FIXTURE LENSES. REPLACE ALL EXISTING BURNT OUT LAMPS AND BALLASTS.
8. OCCUPANCY SENSORS IN CEILINGS BEING DEMOLISHED ARE TO BE REMOVED AND RELOCATED, REFER TO ELECTRICAL LIGHTING SHEETS FOR NEW LOCATIONS.
9. WIFI DEVICES IN CEILINGS BEING DEMOLISHED ARE TO BE REMOVED AND RELOCATED, REFER ELECTRICAL POWER SHEETS FOR NEW LOCATIONS.
10. EXISTING FIRE ALARM DEVICES IN WALLS OR CEILINGS BEING DEMOLISHED ARE TO BE REMOVED AND RELOCATED AS SHOWN ON SPECIAL SYSTEMS PLAN.
11. FIELD VERIFY ALL EXISTING CONDITIONS.

ELECTRICAL DEMO LEGEND

ELECTRICAL DEVICES WITH BOLD DASHED LINES ARE TO BE DEMOLISHED UNLESS OTHERWISE NOTED; DISCONNECT REMOVE CONDUIT AND WIRE BACK TO JUNCTION POINT. MAINTAIN CONTINUITY TO REMAINING DEVICES ON THAT CIRCUIT. FIELD VERIFY EXISTING CONDITIONS.

GRAYED OUT ELECTRICAL DEVICES ARE EXISTING TO REMAIN DEVICES.

SUBSCRIPTS
ER= EXISTING TO REMAIN
RE= REMOVE EXISTING
RRE= REMOVE AND RELOCATE EXISTING
S= SURFACE MOUNT

ELECTRICAL DEMO KEYED NOTES

1. RELOCATE EXISTING FIBER OPTIC QUAZITE BOX TO NEW ACCESSIBLE GREEN SPACE. EXTEND ALL CONDUITS. REMOVE EXISTING FIBER OPTIC CABLE IN CONDUITS AND REPLACE WITH PULL STRING.
2. REMOVE EXISTING BOX AND CONDUIT TO CAMERA. MASON IS TO PATCH BRICK AT THIS LOCATION. PROTECT CAMERAS FOR REINSTALLATION.

STATE OF ARKANSAS REGISTERED PROFESSIONAL ENGINEER No.16929 MICHAEL T. RAPOLD 4-6-2026

Hight Jackson ASSOCIATES
5201 W Village Parkway, Suite 300 | Rogers, Arkansas 72758 | (479) 464-4965 | www.hjarch.com

An Addition for BWHS
BWHS Band Addition
1351Gamble Rd, Centerton, AR 72719

DRAWN BY: G.S.
CHECK BY: M.T.R.
ISSUE DATE: 04/06/2026
PROJECT NO.: 2421
REVISION DATES

HSAEngineering
479 / 452 / 8922 office
7405 Ellis St.
Fort Smith, AR 72916
HSAConsultants.com

HSA JOB # 25-200

ELECTRICAL DEMOLITION PLAN
SHEET
E2.0

COPYRIGHT 2026
THESE DRAWINGS AND SPECIFICATIONS ARE THE EXCLUSIVE PROPERTY OF HIGHT JACKSON ASSOCIATES PA. USE OR REPRODUCTION IS PROHIBITED WITHOUT WRITTEN CONSENT

LIGHTING FIXTURE SCHEDULE

MARK	VOLT	WATT	LAMP NO.	LAMP COLOR TEMP	MOUNTING BRKT	MOUNTING PEND	MOUNTING REC	MOUNTING SURF	MANUFACTURER	CATALOG NO.	REMARKS
A2	UNV	41	--	4000K			X		H.E. WILLIAMS	LT-24-L52/840-AF-DIM-UNV	2X4' LED DIRECT INDIRECT TROFFER, 5200 LUMEN OUTPUT. 0-10V
									METALUX	24CZ2-55-S-UNV-L840-CD1-U	
A3	UNV	56	--	4000K			X		H.E. WILLIAMS	LT-24-L95/840-AF-DIM-UNV	2X4' LED DIRECT INDIRECT TROFFER, 9500 LUMEN OUTPUT. 0-10V DIMMING
									METALUX	24CZ2-95-S-UNV-L840-CD1-U	
D1	UNV	70	--	4000K				X	CREE LIGHTING	OSQN-C-4L-40K-3M-UL-XM-CTB5	LED WALL PACK, FINISH TO MATCH EXISTING WALL PACKS.
EXIT	UNV	5	--	4000K					MULE LIGHTING	PVT-U-A-G-S/R-BA	EXIT SIGN, EDGE LIT, UNIVERSAL MOUNT- SEE PLANS FOR NUMBER OF SIDES AND CHEVRONS. REQUIRES UNSWITCHED HOT WIRE.
									BARRON	S900U-LB-SR-RED-AG	
RRE											EXISTING LIGHT FIXTURE TO BE REMOVED AND RELOCATED.
RE											EXISTING LIGHT FIXTURE TO BE REMOVED AND RETURNED TO THE OWNER
ER											EXISTING LIGHT FIXTURE REMAIN

NOTE : HOLD ALL INSULATION OFF RECESSED FIXTURES AT A MINIMUM OF 3" TO THE SIDE.
NOTE : EXIT LIGHTS AND EMERGENCY LIGHTS REQUIRES UNSWITCHED HOT WIRE PER MANUFACTURER RECOMMENDATION.
NOTE : FIXTURES MARKED AS "CTB5" REQUIRE STANDARD FINISHED SELECTED BY THE ARCHITECT.
NOTE : FOR ALL FIXTURES WITH 0-10V DIMMING, PROVIDE LOW VOLTAGE CABLE.
NOTE : FIXTURES MARKED NL REQUIRE UNSWITCHED HOT WIRE.
NOTE : ELECTRICAL CONTRACTOR TO PROVIDE AND INSTALL LED AND DRIVER COMBINATIONS THAT WILL PROVIDE THE OWNER WITH A FIVE YEAR WARRANTY ON THE FIXTURE.
NOTE : FIXTURES DENOTED BY EM REQUIRE A NON-DIMMING TYPE GENERATOR TRANSFER DEVICE. REFER TO DETAIL 3/E3.3. FIXTURES DENOTED BY EMD REQUIRE A DIMMING TYPE TRANSFER DEVICE. REFER TO DETAIL 4/E3.3.
NOTE : FIELD VERIFY ALL FIXTURE LENGTHS NOTES AS LENGTH PER PLANS. PROVIDE CONTINUOUS RUNS OF FIXTURES. COORDINATE WITH THE ARCHITECTURAL DRAWINGS AND THE ARCHITECT.

GENERAL LIGHTING NOTES

1. GRAYED OUT DEVICES SHOW EXISTING TO REMAIN DEVICE LOCATIONS.
2. NEW DEVICES INSTALLED IN EXISTING CONCRETE BLOCK WALLS ARE TO BE INSTALLED VIA MC CABLE AND FLEXIBLE CONDUIT.

KEYED LIGHTING NOTES

1. CONNECT TO EXISTING EMERGENCY LIGHTING CIRCUIT "2HXK-12". REQUIRES FIELD VERIFY EXISTING CONDITIONS. ALL EMERGENCY LIGHTS CAN BE ON SAME CIRCUIT.
2. CIRCUIT FROM EXISTING PANEL "HL1". REQUIRES 2-#12, 1-#12 GRD ¾ CONDUIT. USE EXISTING 20 AMP SINGLE POLE SPARE BREAKER, FIELD VERIFY EXISTING CONDITIONS. PANEL IS LOCATED IN ROOM L109.
3. CONNECT TO EXISTING LIGHTING CIRCUIT.
4. CONNECT TO EXISTING EXTERIOR WALL PACK LIGHTING CIRCUIT FROM PANEL "2HXK-14".
5. MOUNT AT SAME HEIGHT AS EXISTING WALL MOUNTED OCCUPANCY SENSORS THIS ROOM TYPICAL FOR ALL NEW OCCUPANCY SENSORS

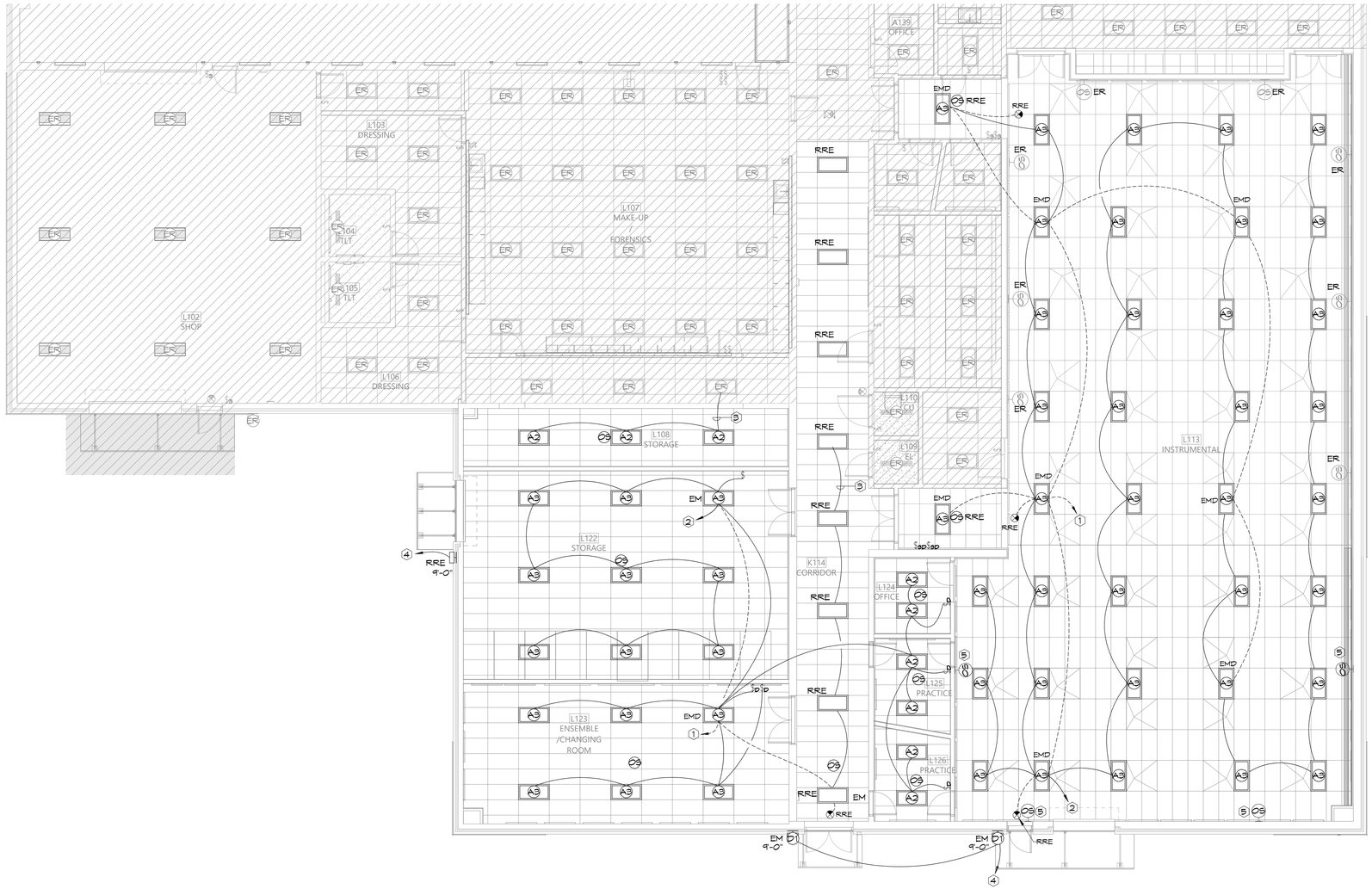

NOTE:
NO HOLES TO BE CUT IN ACOUSTICAL SOUND PANELS. COORDINATE ANY CONFLICTS WITH ARCHITECT PRIOR TO ROGH-IN.

1 FIRST FLOOR LIGHTING
1/8" = 1'-0"

NORTH

HSAEngineering
479 / 452 / 8922 office
7405 Ellis St.
Fort Smith, AR 72916
HSAConsultants.com

HSA JOB # 25-200

STATE OF ARKANSAS REGISTERED PROFESSIONAL ENGINEER No.16929 MICHAEL T. RAPOSO 4-6-2026

Hight Jackson ASSOCIATES
5201 W Village Parkway, Suite 300 | Rogers, Arkansas 72758 | (479) 464-4965 | www.hjarch.com

An Additon for BWHS
BWHS Band Addition
1351Gamble Rd, Centerton, AR 72719

DRAWN BY. G.S.
CHECK BY. M.T.R.
ISSUE DATE 04/06/2026
PROJECT NO. 2421
REVISION DATES

LIGHTING PLAN
SHEET
E2.1

COPYRIGHT 2026
THESE DRAWINGS AND SPECIFICATIONS ARE THE EXCLUSIVE PROPERTY OF HIGHT JACKSON ASSOCIATES PA. USE OR REPRODUCTION IS PROHIBITED WITHOUT WRITTEN CONSENT

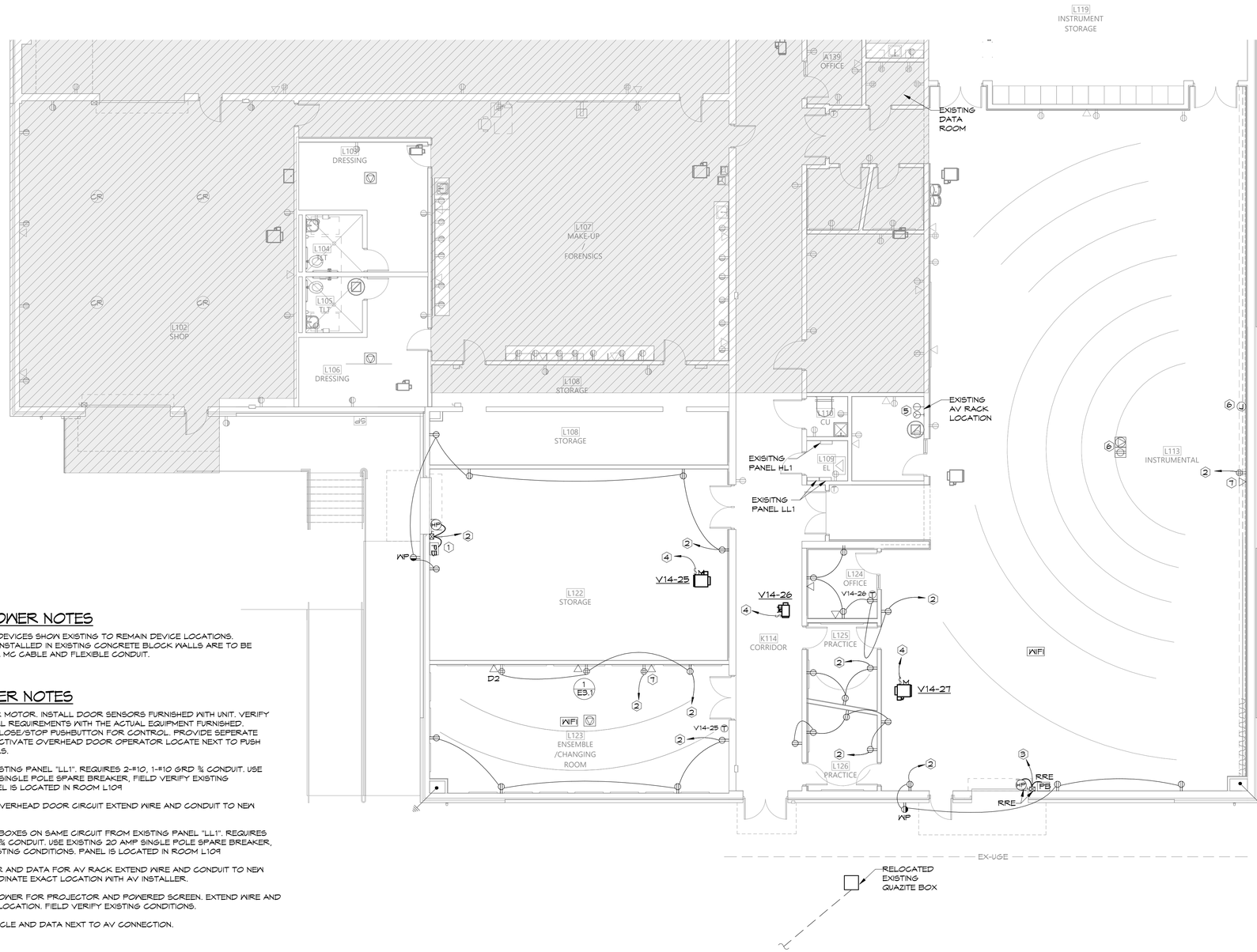

NOTE:
NO HOLES TO BE CUT IN ACOUSTICAL SOUND PANELS. COORDINATE ANY CONFLICTS WITH ARCHITECT PRIOR TO ROGH-IN.

GROUNDING NOTE:
AT EACH LOCATION NOTED:
1. INSTALL ONE 3/4"X8' CU GROUND ROD
2. CONNECT TO BUILDING STEEL WITH 1/0 BARE CU
3. CONNECTIONS SHALL BE EXOTHERMIC WELDS OR COMPRESSION (CRIMP) CONNECTIONS MANUFACTURED FOR THAT PURPOSE
4. CONNECT TO IN FOOTING REBAR.

GENERAL POWER NOTES

1. GRAYED OUT DEVICES SHOW EXISTING TO REMAIN DEVICE LOCATIONS.
2. NEW DEVICES INSTALLED IN EXISTING CONCRETE BLOCK WALLS ARE TO BE INSTALLED VIA MC CABLE AND FLEXIBLE CONDUIT.

KEYED POWER NOTES

1. OVERHEAD DOOR MOTOR. INSTALL DOOR SENSORS FURNISHED WITH UNIT. VERIFY EXACT ELECTRICAL REQUIREMENTS WITH THE ACTUAL EQUIPMENT FURNISHED. PROVIDE OPEN/CLOSE/STOP PUSHBUTTON FOR CONTROL. PROVIDE SEPERATE SWITCH THAT DEACTIVATE OVERHEAD DOOR OPERATOR LOCATE NEXT TO PUSH BUTTON CONTROLS.
2. CIRCUIT FROM EXISTING PANEL "LL1". REQUIRES 2-#10, 1-#10 GRD ¾ CONDUIT. USE EXISTING 20 AMP SINGLE POLE SPARE BREAKER, FIELD VERIFY EXISTING CONDITIONS. PANEL IS LOCATED IN ROOM L109
3. REUSE EXISTING OVERHEAD DOOR CIRCUIT EXTEND WIRE AND CONDUIT TO NEW LOCATION.
4. CIRCUIT ALL VAV BOXES ON SAME CIRCUIT FROM EXISTING PANEL "LL1". REQUIRES 2-#10, 1-#10 GRD ¾ CONDUIT. USE EXISTING 20 AMP SINGLE POLE SPARE BREAKER, FIELD VERIFY EXISTING CONDITIONS. PANEL IS LOCATED IN ROOM L109
5. RELOCATE POWER AND DATA FOR AV RACK EXTEND WIRE AND CONDUIT TO NEW LOCATION. COORDINATE EXACT LOCATION WITH AV INSTALLER.
6. REUSE EXISTING POWER FOR PROJECTOR AND POWERED SCREEN. EXTEND WIRE AND CONDUIT TO NEW LOCATION. FIELD VERIFY EXISTING CONDITIONS.
7. LOCATE RECEPTACLE AND DATA NEXT TO AV CONNECTION.

1 FIRST FLOOR POWER PLAN
1/8" = 1'-0"

NORTH

STATE OF ARKANSAS
REGISTERED PROFESSIONAL ENGINEER
No. 16929
MICHAEL T. RAPPOLD
4-6-2026

Hight Jackson ASSOCIATES
5201 W Village Parkway, Suite 300 | Rogers, Arkansas 72758 | (479) 464-4965 | www.hjarch.com

An Addition for BWHS
BWHS Band Addition
1351 Gamble Rd, Centerton, AR 72719

DRAWN BY: G.S.
CHECK BY: M.T.R.
ISSUE DATE: 04/06/2026
PROJECT NO: 2421
REVISION DATES

HSAEngineering
479 / 452 / 8922 office
7405 Ellis St.
Fort Smith, AR 72916
HSAConsultants.com

HSA JOB # 25-200

POWER PLAN
SHEET
E2.2

COPYRIGHT 2026
THESE DRAWINGS AND SPECIFICATIONS ARE THE EXCLUSIVE PROPERTY OF HIGHT JACKSON ASSOCIATES PA USE OR REPRODUCTION IS PROHIBITED WITHOUT WRITTEN CONSENT

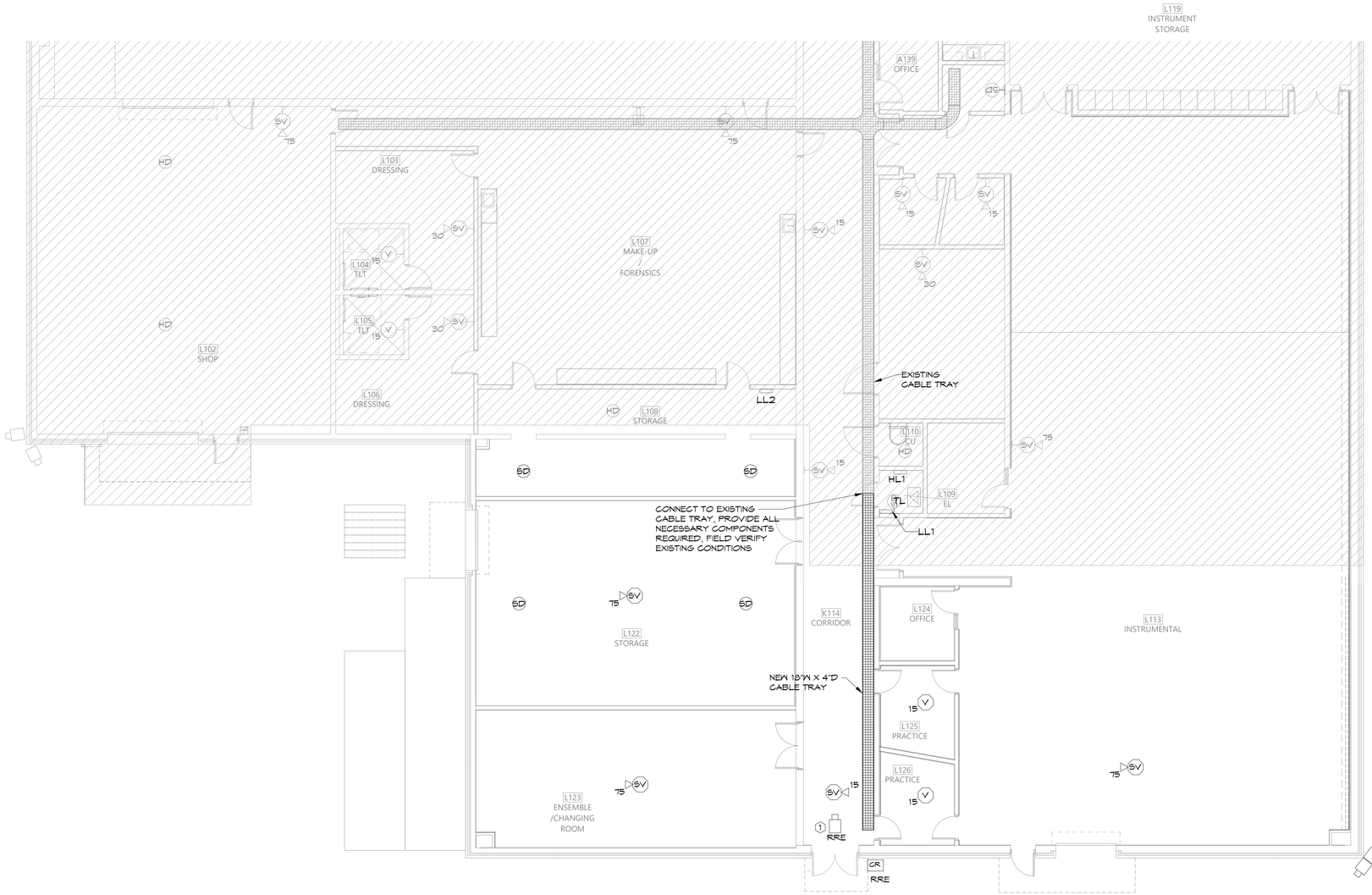

GENERAL SPECIAL SYSTEMS NOTES

1. GRAYED OUT DEVICES SHOW EXISTING TO REMAIN DEVICE LOCATIONS.
2. NEW DEVICES INSTALLED IN EXISTING CONCRETE BLOCK WALLS ARE TO BE INSTALLED VIA MC CABLE AND FLEXIBLE CONDUIT.

KEYED SPECIAL SYSTEMS NOTES

1. THE ELECTRICAL CONTRACTOR IS RESPONSIBLE FOR RELOCATING THE CAMERA AND INSTALL A NEW DATA CABLE TO EACH LOCATION.

NOTE:
NO HOLES TO BE CUT IN ACOUSTICAL SOUND PANELS. COORDINATE ANY CONFLICTS WITH ARCHITECT PRIOR TO ROGH-IN.

1 FIRST FLOOR SPECIAL SYSTEMS PLAN

1/8" = 1'-0"

NORTH

HSAEngineering
479 / 452 / 8922 office
7405 Ellis St.
Fort Smith, AR 72916
HSAConsultants.com

HSA JOB # 25-200

STATE OF ARKANSAS
REGISTERED PROFESSIONAL ENGINEER
No. 16929
MICHAEL T. RAPPOLD
4-6-2026

Hight Jackson ASSOCIATES
5201 W Village Parkway, Suite 300 | Rogers, Arkansas 72758 | (479) 464-4965 | www.hjarch.com

An Addition for BWHS
BWHS Band Addition
1351 Gamble Rd, Centerton, AR 72719

DRAWN BY: G.S.
CHECK BY: M.T.R.
ISSUE DATE: 04/06/2026
PROJECT NO. 2421
REVISION DATES

SPECIAL SYSTEMS PLAN
SHEET
E2.3

COPYRIGHT 2026
THESE DRAWINGS AND SPECIFICATIONS ARE THE EXCLUSIVE PROPERTY OF HIGHT JACKSON ASSOCIATES PA. USE OR REPRODUCTION IS PROHIBITED WITHOUT WRITTEN CONSENT

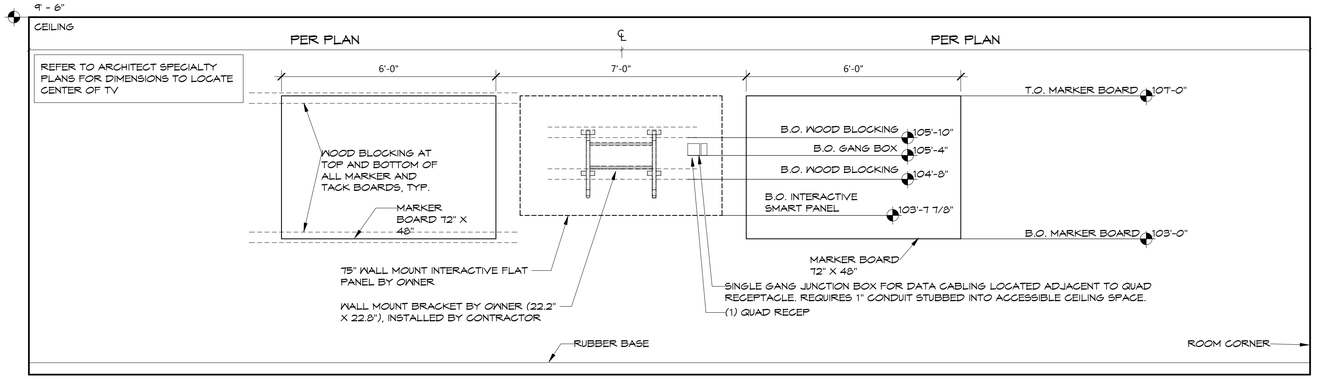

1 TYPICAL TEACHING WALL
N.T.S.

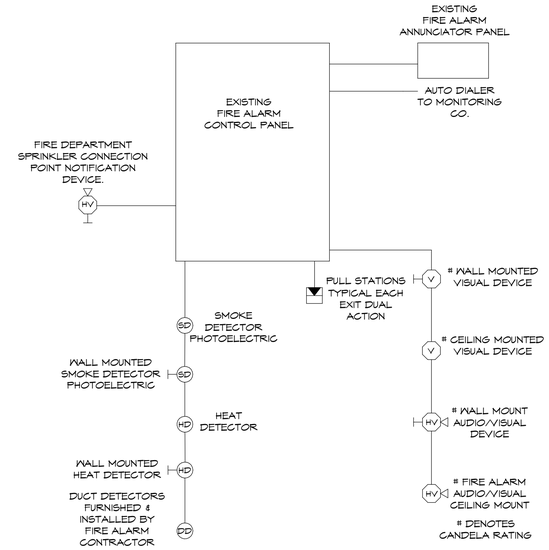

NOTE:
1. INSTALL WIRING TO ALL DUCT DETECTORS. REFER TO SPECIAL SYSTEMS PLANS.
2. COORDINATE WITH THE MECHANICAL DRAWINGS.
3. COORDINATE WITH THE LOCAL "A.H.J." PRIOR TO BIDDING THIS PROJECT.
4. FIRE ALARM CONTRACTOR TO MODIFY AS NECESSARY FOR SYSTEM PROVIDED.

2 FIRE ALARM SYSTEM RISER DIAGRAM
N.T.S.

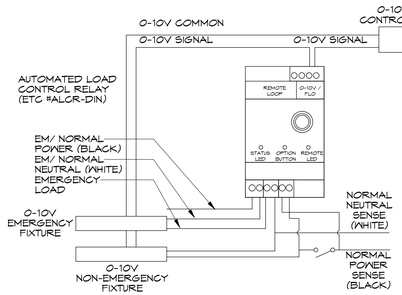

0-10V FIXTURE CONTROL (ETC #ALCR-DIN ONLY)

1. WHEN NORMAL POWER IS PRESENT AND SWITCH IS CLOSED, BOTH 0-10V CONTROLLED FIXTURE(S) DIM.
2. WHEN NORMAL POWER IS PRESENT AND SWITCH IS OPEN, BOTH 0-10V CONTROLLED FIXTURE(S) TURN OFF.
3. WHEN NORMAL POWER IS LOST OR FIRE ALARM CONNECTION IS BROKEN, ALL FIXTURE(S) TURN TO FULL - 0-10V CONNECTION IS OPENED.

3 EM AUTOMATIC TRANSFER SWITCH DEVICE (DIMMING FIXTURES)
N.T.S.

MOUNTING HEIGHTS

ELECTRICAL OUTLET DEVICE TYPE	MASONRY WALL, BASE (STARTER) COURSE HEIGHT 4 INCH / 8 INCH MOUNTING HEIGHT ABOVE FLOOR TO BOTTOM OF OUTLET (DEVICE) BOX	SHEETROCK WALL, BASE MOUNTING HEIGHT ABOVE FLOOR TO BOTTOM OF OUTLET (DEVICE) BOX
* RECEPTACLES OUTLETS, MICROPHONE OUTLETS (JACKS), EQUIPMENT OUTLETS (JACKS), TELEVISION OUTLETS (JACKS), PORTABLE TELEPHONE OUTLETS, COMPUTER OUTLETS, ETC.		
* GENERAL DEVICE THROUGHOUT	18"	18"
* MECHANICAL EQUIPMENT ROOMS	52"	48"
* ABOVE 24" HIGH COUNTER TOPS	30"	32"
* ABOVE 30" HIGH COUNTER TOPS	36"	40"
* ABOVE 36" HIGH COUNTER TOPS	44"	48"
* ABOVE 48" HIGH COUNTER TOPS	52"	56"
* ABOVE BACKSPLASH TOP	2" (MINIMUM)	2" (MINIMUM)
* ABOVE OR ADJACENT TO LAVATORIES	44"	48"
* BEHIND DOMESTIC REFRIGERATORS	52"	56"
* BEHIND DOMESTIC WASHERS AND DRYERS	36"	32"
* SERVING DOMESTIC DISHWASHERS	2"	2"
* WALL-MOUNTED TELEPHONE OUTLETS	44"	48"
* TELEPHONE/VIDEO CONTROL	44"	48"
TOGGLE SWITCHES	48"	48"
RECESSED MOTOR CONTROLLERS	60"	56"
ELECTRICAL PANELS, TERMINAL CABINETS, ETC., TO CENTER OF TUB OR BOX	50"	48"
WALL SWITCHES	48"	48"
HVAC THERMOSTAT/SENSOR	48"	48"
VOLUME CONTROLS, CALL-IN SWITCHES, DOOR BELL BUTTONS	44"	44"
HORN/STROBES (FIRE ALARM)	80"	80"
* PULL STATIONS (FIRE ALARM)	42" MINIMUM 48" MAXIMUM	42" MINIMUM 48" MAXIMUM

NOTE: VERIFY ALL MILLWORK LOCATIONS WITH THE ARCHITECTURAL MILLWORK DRAWINGS PRIOR TO ROUGH-IN.
* OPERATING HANDLE TO BE MOUNTED NO LESS THAN 42" OR NO MORE THAN 48" A.F.F.

STANDARD WIRING FOR SWITCHED CONTROL OF EMERGENCY LIGHTING ALONG WITH NORMAL LIGHTING

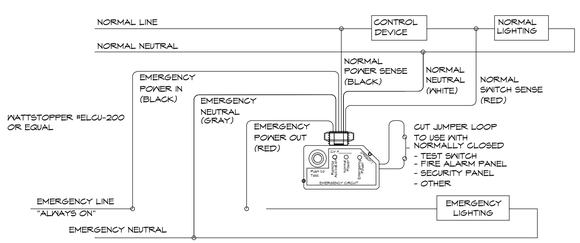

4 EM AUTOMATIC TRANSFER SWITCH DEVICE(NON-DIMMING)
N.T.S.

STATE OF ARKANSAS REGISTERED PROFESSIONAL ENGINEER No.16929 MICHAEL T. RAPPOLD 4-6-2026

HightJackson ASSOCIATES
5201 W Village Parkway, Suite 300 | Rogers, Arkansas 72758 | (479) 464-4965 | www.hjarch.com

An Additon for BWHS
BWHS Band Addition
1351Gamble Rd, Centerton, AR 72719

DRAWN BY. G.S.
CHECK BY. M.T.R.
ISSUE DATE 04/06/2026
PROJECT NO. 2421
REVISION DATES

HSAEngineering
479 / 452 / 8922 office
7405 Ellis St.
Fort Smith, AR 72916
HSAConsultants.com

HSA JOB # 25-200

ELECTRICAL DETAILS
SHEET
E3.1

COPYRIGHT 2026
THESE DRAWINGS AND SPECIFICATIONS ARE THE EXCLUSIVE PROPERTY OF HIGHT JACKSON ASSOCIATES PA. USE OR REPRODUCTION IS PROHIBITED WITHOUT WRITTEN CONSENT.

TECHNOLOGY SYMBOLS LEGEND

- FLOOR BOX OR FLOOR POKE-THRU DEVICE
- FLOOR CONDUIT STUB
- COMMUNICATIONS DEVICE - WALL
- COMMUNICATIONS DEVICE - CEILING
- AUDIOVISUAL DEVICE - WALL
- AUDIOVISUAL DEVICE - CEILING
- ELECTRONIC SECURITY DEVICE - WALL
- ELECTRONIC SECURITY DEVICE - CEILING, UNDERMOUNT, OR DOOR
- SPECIAL PURPOSE POWER RECEPTACLE - WALL
- SIMPLEX POWER RECEPTACLE - WALL
- DUPLEX POWER RECEPTACLE - WALL
- DOUBLE DUPLEX POWER RECEPTACLE - WALL
- HARDWIRED POWER CONNECTION - WALL
- SPECIAL PURPOSE POWER RECEPTACLE - CEILING
- SIMPLEX POWER RECEPTACLE - CEILING
- DUPLEX POWER RECEPTACLE - CEILING
- DOUBLE DUPLEX POWER RECEPTACLE - CEILING
- HARDWIRED POWER CONNECTION - CEILING
- SECURITY CAMERA - SINGLE SENSOR - WALL
- SECURITY CAMERA - SINGLE SENSOR - CEILING
- SECURITY CAMERA - PTZ - WALL
- SECURITY CAMERA - PTZ - CEILING
- SECURITY CAMERA - 360° - WALL
- SECURITY CAMERA - 360° - CEILING
- SECURITY CAMERA - MULTI-SENSOR - WALL
- SECURITY CAMERA - MULTI-SENSOR - CEILING
- SECURITY CAMERA - DUAL-SENSOR - WALL
- SECURITY CAMERA - DUAL-SENSOR - CEILING
- LOUDSPEAKER - CEILING (LOCATION SHOWN FOR COORDINATION PURPOSES ONLY)
- LOUDSPEAKER - WALL (LOCATION SHOWN FOR COORDINATION PURPOSES ONLY)
- CLOCK - WALL
- CABLE TRAY - REFER TO PLANS FOR SIZE
- COMMUNICATIONS CONDUIT - REFER TO PLANS FOR SIZE
- J-J-J-J-J J-HOOK PATHWAY - REFER TO PLANS FOR SIZE
- CABLE LADDER RUNWAY - REFER TO PLANS FOR SIZE

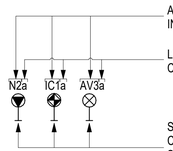

ALPHANUMERIC DEVICE ID DESIGNATES INFRASTRUCTURE REQUIREMENTS

LOWERCASE LETTER DESIGNATES CABLE PULL TYPE

SYMBOL DESIGNATES AUDIOVISUAL, COMMUNICATIONS, OR ELECTRONIC SECURITY DEVICE AND FLOOR, WALL, OR CEILING CONDITION

NOTE: NOT ALL EXAMPLES ARE SHOWN

DEVICE TAG WITH CABLE PULL TYPE

SC1a

SECURITY CAMERA TAG → CAM-01

DENOTES DEVICES WHICH ARE INSTALLED IN THE SAME LOCATION (I.E., SECURITY CAMERA AND ITS ASSOCIATED NETWORK OUTLET)

NOTE: NOT ALL EXAMPLES ARE SHOWN

REFER TO COMMUNICATIONS CABLING LEGEND FOR MORE INFORMATION ON CABLE PULL TYPE

AC = ELECTRONICALLY CONTROLLED AND/OR MONITORED DOOR
AP = WIRELESS ACCESS POINT
AV = AUDIOVISUAL DEVICE
CR = CARD READER
FB = FLOOR BOX
FP = FLOOR POKE-THRU
FS = FLOOR STUB
IC = SECURITY INTERCOM
KP = SECURITY KEYPAD
MS = SECURITY MOTION SENSOR
N = COMMUNICATIONS OUTLET
P = POWER RECEPTACLE
PB = SECURITY PUSH-BUTTON
RX = SECURITY REQUEST-TO-EXIT BUTTON
SC = SECURITY CAMERA

NOTES
1. FOR "AV" DEVICES, REFER TO AUDIOVISUAL INFRASTRUCTURE SCHEDULE.
2. FOR "N" AND "AP" DEVICES, REFER TO COMMUNICATIONS INFRASTRUCTURE SCHEDULE.
3. FOR "AC", "CR", "IC", "KP", "MS", "PB", "RX", AND "SC" DEVICES, REFER TO ELECTRONIC SECURITY INFRASTRUCTURE SCHEDULE.
4. FOR "FB", "FP", AND "FS" DEVICES, REFER TO TECHNOLOGY FLOOR INFRASTRUCTURE SCHEDULE.
5. FOR "P" DEVICES, REFER TO TECHNOLOGY POWER COORDINATION SCHEDULE.

Xx(Yy,Zz)

DENOTES DEVICES WHICH CONTAIN OTHER DEVICES, FOR EXAMPLE:

AVx(Nx,Px) = COMBINATION AUDIOVISUAL BOX CONTAINING NETWORK OUTLET AND POWER RECEPTACLE
FBx(Nx,Px) = FLOOR BOX CONTAINING NETWORK OUTLET AND POWER RECEPTACLE
FPx(Nx,Px) = FLOOR POKE-THRU CONTAINING COMMUNICATIONS AND POWER FURNITURE FEEDS

NOTE: NOT ALL EXAMPLES ARE SHOWN

AVxAVx OR NxNx OR CRxICx

DENOTES DEVICES WHICH FALL ON THE SAME VERTICAL PLANE

NOTE: NOT ALL EXAMPLES ARE SHOWN

TAG FOR LOWEST DEVICE

TAG FOR HIGHEST DEVICE

NxNx

ONE SYMBOL INDICATES MULTIPLE DEVICES

T000 #

ELEVATION SYMBOL
DETAIL # / SHEET #

T000

SECTION SYMBOL
DETAIL # / SHEET #

X

DISPLAY TYPE - REFER TO PROJECTION SCREEN TYPE SCHEDULE AND DISPLAY TYPE SCHEDULE FOR MORE INFORMATION

DISPLAY TYPE AND DISPLAY MOUNTING STYLE
REFER TO SHEET T002 FOR MORE INFORMATION

NUMBER DESIGNATES DISPLAY TYPE — #X — LETTER DESIGNATES DISPLAY MOUNTING STYLE

PROJECTION SCREEN TYPE AND PROJECTOR MOUNTING STYLE
REFER TO SHEET T002 FOR MORE INFORMATION

LETTER DESIGNATES PROJECTION SCREEN TYPE — X# — NUMBER DESIGNATES PROJECTOR MOUNTING STYLE

RACK SYMBOL LEGEND

1U 24-PORT FLAT PATCH PANEL	2U 48-PORT FLAT PATCH PANEL	1U 24-PORT ANGLED PATCH PANEL	2U 48-PORT ANGLED PATCH PANEL	1U 24-PORT NETWORK SWITCH	1U 48-PORT NETWORK SWITCH	1U SERVER
1U FIBER PANEL	2U FIBER PANEL	4U FIBER PANEL	1U HORIZONTAL WIRE MANAGER	2U HORIZONTAL WIRE MANAGER	4U HORIZONTAL WIRE MANAGER	2U SERVER
1U BLANK PANEL	2U BLANK PANEL	3U BLANK PANEL	4U BLANK PANEL	1U GROUND BAR	1U PDU	3U SERVER
FLOOR-STANDING EQUIPMENT RACK	FLOOR-STANDING NETWORK CABINET	VERTICAL WIRE MANAGER	WALL-MOUNTED EQUIPMENT RACK OR NETWORK CABINET	2U UPS	4U UPS	4U SERVER
				3U UPS	RACK MOUNTED BATTERY (+/-)	
				RACK-MOUNTED PUNCH-DOWN BLOCK	2U SHELF	

SYMBOLS INDICATED HERE AND NOT USED IN THE CONTRACT DOCUMENTS DO NOT APPLY TO THIS PROJECT. ADDITIONAL SYMBOLS AND ABBREVIATIONS MAY BE INDICATED IN THE CONTRACT DOCUMENTS.

GENERAL NOTES:

A. REFER TO SHEET Exxx FOR SITE COMMUNICATIONS AND SECURITY INFORMATION.

COMMUNICATIONS CABLING NOTES:

A. INSTALL COMMUNICATIONS HORIZONTAL CABLES CONTINUOUS FROM WORK AREA OUTLET TO COMMUNICATIONS EQUIPMENT ROOM. INSTALL COMMUNICATIONS BACKBONE CABLES CONTINUOUS BETWEEN COMMUNICATIONS EQUIPMENT ROOMS. DO NOT SPLICE COMMUNICATIONS CABLES.

B. CABLING DAMAGED DURING ITS INSTALLATION WILL NOT BE ACCEPTED. DAMAGED CABLING, INCLUDING PAINTED CABLES, SHALL BE REPLACED WITH NEW CABLING AT THE EXPENSE OF THE CONTRACTOR. DAMAGE INCLUDES PHYSICAL DAMAGE TO CABLES OR IMPROPER INSTALLATION PRACTICES THAT MAY AFFECT PERFORMANCE.

C. COORDINATE FINAL LOCATION OF ALL TECHNOLOGY OUTLETS AND DEVICES WITH ARCHITECTURAL ELEVATIONS AND ELECTRICAL PLANS.

D. REFER TO TECHNOLOGY DETAIL AND RISER SHEETS FOR CABLING, FACEPLATE, GROUNDING, AND PATHWAY DIAGRAMS.

E. REFER TO ELECTRICAL SCOPE FOR ADDITIONAL POWER AND ELECTRICAL PATHWAY REQUIREMENTS.

F. COORDINATE WITH THE GENERAL CONTRACTOR AND PAINTING SUBCONTRACTOR SO THAT COMMUNICATIONS CABLES ARE NOT PAINTED OR OVERSPRAYED. PAINTED CABLES SHALL BE REPLACED AT THE EXPENSE OF THE CONTRACTOR.

CONSTRUCTION CABLING NOTES:

A. ALL DEBRIS RESULTING FROM PENETRATIONS SHALL BE CLEARED AND REMOVED FROM SITE ON A DAILY BASIS.

B. PROTECT ALL MATERIALS AND SURFACES TO REMAIN. SURFACES AND MATERIALS DAMAGED DURING CONSTRUCTION WILL BE REPAIRED AND FINISHED TO MATCH ORIGINAL CONDITIONS. PROTECT EQUIPMENT AND FURNISHINGS WHERE CONSTRUCTION WILL CAUSE DUST, DEBRIS, AND POSSIBLE DAMAGE.

C. EXERCISE CARE WHEN REMOVING OR REPLACING SUSPENDED CEILING TILES. DAMAGED TILES SHALL BE REPLACED WITH NEW TILES. DAMAGE INCLUDES FINGERPRINTS LEFT ON NEW/EXISTING TILES.

D. STAGING AREAS USED FOR CONSTRUCTION SHALL BE RETURNED TO ORIGINAL CONDITION TO OWNER'S SATISFACTION. COORDINATE WITH THE GENERAL CONTRACTOR TO OBTAIN WORK TRAILER, MATERIAL STORAGE, STAGING, AND PARKING SPACE. PROVIDE WORK TRAILER, SECURE STORAGE SPACE, PHONE LINES, AND ANY OTHER SERVICE DEEMED NECESSARY. THE OWNER WILL NOT PROVIDE ANCILLARY SERVICES AT THE CONSTRUCTION SITE.

E. FIRESTOP ALL FLOOR, CABLE TRAY, CONDUIT, SLEEVE, AND WALL PENETRATIONS.

F. BOND ALL CABLE TRAYS AND CABLE LADDER RUNWAYS WITH CONDUIT SLEEVES AND PATHWAYS USING MANUFACTURER'S RECOMMENDED HARDWARE.

DETAIL NOTE:

A. PROJECT DETAILS ARE PROVIDED ON DESIGNATED DETAIL SHEETS. DETAILS APPLY TO THE ENTIRE PROJECT IN ALL LOCATIONS WHERE DETAILED CONDITION EXISTS AND ARE ONLY REFERENCED TO PROVIDE CLARITY IF NECESSARY.

PRELIMINARY

Hight Jackson ASSOCIATES
5201 W Village Parkway, Suite 300 | Rogers, Arkansas 72758 | (479) 464-4965 | www.hjarch.com

PROGRESS PRINT
NOT TO BE USED FOR CONSTRUCTION
04/06/2026
DATE PRINTED

© COPYRIGHT 2026 20252281
Permission to reproduce all or part of this drawing is hereby granted solely for the limited purpose of construction of this project or archiving. Unauthorized copying, disclosure or construction use without written permission of Alvine is prohibited by copyright law.

NOTE:
DO NOT SCALE DRAWINGS. VERIFY ALL DIMENSIONS and clearances from ARCHITECTURAL, STRUCTURAL, shop and other appropriate drawing or at site. Lay out and coordinate all work prior to installation to provide clearances required for operation, maintenance, and codes and verify non-interference with other work. DO NOT FABRICATE PRIOR TO VERIFICATION OF CLEARANCE FOR ALL TRADES. READ SPECIFICATIONS.

Alvine
1201 Cass St.
Omaha, NE 68102 402.346.7007

BWHS ARTS ADDITION
1351 GAMBLE RD CENTERTON, AR

DRAWN BY: SCL
CHECK BY: JLH
ISSUE DATE: 04/06/2026
PROJECT NO: 2421
REVISION DATES

TECHNOLOGY SYMBOLS AND ABBREVIATIONS

SHEET T0.0

THESE DRAWINGS AND SPECIFICATIONS ARE THE EXCLUSIVE PROPERTY OF HIGHT JACKSON ASSOCIATES,PA USE OR REPRODUCTION IS PROHIBITED WITHOUT WRITTEN CONSENT

ABBREVIATIONS

ACEG	AC EQUIPMENT GROUND
AFC	ABOVE FINISHED CEILING
AFF	ABOVE FINISHED FLOOR
AHJ	AUTHORITY HAVING JURISDICTION
ALF	ALUMINUM FRAME DOOR
APPROX	APPROXIMATELY
ATS	AUTOMATIC TRANSFER SWITCH
AUX	AUXILIARY
AV	AUDIOVISUAL
AVI	AUTOMATIC VEHICLE IDENTIFICATION
AWG	AMERICAN WIRE GAUGE
BMCS	BUILDING MANAGEMENT CONTROL SYSTEMS
BICSI	BUILDING INDUSTRY CONSULTING SERVICE INTERNATIONAL
BLDG	BUILDING
BTC	BONDING CONDUCTOR FOR TELECOMMUNICATION
BTU	BRITISH THERMAL UNIT
BTUH	BRITISH THERMAL UNIT PER HOUR
C	CONDUIT
CAB	CABINET
CATV	CABLE TELEVISION
CCTV	CLOSED CIRCUIT TELEVISION
CL	CENTER LINE
CLEC	COMPETITIVE LOCAL EXCHANGE CARRIER
CLG	CEILING
CLR	CLEAR
CM	COMMUNICATIONS CABLE
CMP	COMMUNICATIONS PLENUM CABLE
CMR	COMMUNICATIONS RISER CABLE
COAX	COAXIAL CABLE
CO-OSP	CUSTOMER OWNED-OUTSIDE PLANT
CRAC	COMPUTER ROOM AIR CONDITIONER
CT	CABLE TRAY
DAS	DISTRIBUTED ANTENNA SYSTEM
DIA	DIAMETER
DN	DOWN
DP	DEMARCATION POINT
DPS	DOOR POSITION SWITCH
DVR	DIGITAL VIDEO RECORDER
DWG	DRAWING
DX	DIRECT EXPANSION
EAC	ELECTRONIC ACCESS CONTROL
EC	ELECTRICAL CONTRACTOR
EGB	ELECTRICAL GROUND BAR
EL	ELEVATION
ELEC	ELECTRICAL
EMI	ELECTROMAGNETIC INTERFERENCE
EMS	ENERGY MANAGEMENT SYSTEM
EMT	ELECTRICAL METALLIC TUBING
EPO	EMERGENCY POWER OFF
EQUIP	EQUIPMENT
ER	EQUIPMENT ROOM
EXH	EXHAUST
EXIST	EXISTING
FA	FIRE ALARM
FAA	FIRE ALARM ANNUNCIATOR PANEL
FACP	FIRE ALARM CONTROL PANEL
FMC	FLEXIBLE METAL CONDUIT
FB	FLOOR BOX
FL	FLOOR
FO	FIBER OPTIC
FOV	FIELD OF VIEW
FP	FIBER PANEL
FT	FEET
GA	GAUGE
GALV	GALVANIZED
GC	GENERAL CONTRACTOR
GEC	GROUNDING ELECTRODE CONDUCTOR
GEN	GENERATOR
GFCI	GROUND FAULT CIRCUIT INTERRUPTER
GND	GROUND
HGT	HEIGHT
HH	HANDHOLE
HMF	HOLLOW METAL FRAME DOOR
HVAC	HEATING, VENTILATING AND AIR CONDITIONING
HZ	HERTZ
IC	INTERCOM
IDC	INSULATION DISPLACEMENT CONNECTOR
IDF	INTERMEDIATE DISTRIBUTION FRAME
IDS	INTRUSION DETECTION SYSTEM
IP	INTERNET PROTOCOL
ISP	INSIDE PLANT
JB	JUNCTION BOX
KCMIL	THOUSAND CIRCULAR MILS
KV	KILOVOLT
KVA	KILOVOLT AMPERE
KW	KILOWATT
LAN	LOCAL AREA NETWORK
LBM	LATCH BOLT MONITOR
LBS	POUNDS
LEC	LOCAL EXCHANGE CARRIER
MATV	MASTER ANTENNA TELEVISION
MAX	MAXIMUM
MBH	1000 BTU/HOUR
MC	MAIN CROSS CONNECT
MDF	MAIN DISTRIBUTION FRAME
MECH	MECHANICAL
MFG	MANUFACTURER
MGB	MAIN GROUND BAR
MIN	MINIMUM
MISC	MISCELLANEOUS
MM	MULTIMODE
MPOE	MAIN POINT OF ENTRANCE
MTD	MOUNTED
MTG	MOUNTING
MUTOA	MULTI USER TELECOMMUNICATIONS OUTLET ASSEMBLY
NC	NORMALLY CLOSED
NEC	NATIONAL ELECTRICAL CODE
NEMA	NATIONAL ELECTRICAL MANUFACTURERS ASSOCIATION
NFPA	NATIONAL FIRE PROTECTION ASSOCIATION
NIC	NOT IN CONTRACT
NO	NORMALLY OPEN
NTS	NOT TO SCALE
NVE	NETWORK VIDEO ENCODER
NVR	NETWORK VIDEO RECORDER
OC	ON CENTER
OFCI	OWNER FURNISHED CONTRACTOR INSTALLED
OPE	OWNER PROVIDED ELECTRONICS
OSP	OUTSIDE PLANT
PABX	PRIVATE AUTOMATIC BRANCH EXCHANGE
PBB	PRIMARY BONDING BUSBAR
PB	PULLBOX
PBO	PROVIDED BY OTHERS
PBX	PRIVATE BRANCH EXCHANGE
PDU	POWER DISTRIBUTION UNIT
PNL	PANEL
POE	POWER OVER ETHERNET
POP	POINT OF PRESENCE
PP	PATCH PANEL
PSTN	PUBLIC SWITCHED TELEPHONE NETWORK
PTZ	PAN-TILT-ZOOM
PVC	POLYVINYL CHLORIDE
PWR	POWER
REQD	REQUIRED
RGS	RIGID GALVANIZED STEEL
RM	ROOM
RQE	REQUEST TO EXIT
SBB	SECONDARY BONDING BUSBAR
SCHD	SCHEDULE
SCTP	SCREENED TWISTED PAIR
SIM	SIMILAR
SLAB	SEALED LEAD ACID BATTERY
SM	SINGLE MODE
SPD	SURGE PROTECTIVE DEVICE
SPECS	SPECIFICATIONS
SS	STAINLESS STEEL
SSI	SECURITY SYSTEMS INTEGRATOR
STD	STANDARD
STP	SHIELDED TWISTED PAIR
SW	SWITCH
T-1	TRUNK LEVEL 1
TBB	TELECOMMUNICATIONS BONDING BACKBONE
TBBIBC	TELECOMMUNICATIONS BONDING BACKBONE INTERCONNECTING BONDING CONDUCTOR
TC	TELECOMMUNICATIONS CLOSET
TEL	TELEPHONE
TELECOM	TELECOMMUNICATIONS
TEMP	TEMPERATURE
TR	TELECOMMUNICATIONS ROOM
TTB	TELEPHONE TERMINAL BOARD
TV	TELEVISION
TVSS	TRANSIENT VOLTAGE SURGE SUPPRESSION
TYP	TYPICAL
UG	UNDERGROUND
UL	UNDERWRITERS LABORATORY
UNO	UNLESS NOTED OTHERWISE
UPS	UNINTERRUPTIBLE POWER SUPPLY
UTP	UNSHIELDED TWISTED PAIR
VA	VOLT -AMPS
VERT	VERTICAL
VOIP	VOICE OVER INTERNET PROTOCOL
W	WATT
WAN	WIDE AREA NETWORK
WAP	WIRELESS ACCESS POINT
WMP	WIRE MANAGEMENT PANEL
WP	WEATHERPROOF
WTH	WIRE TRANSFER HINGE

PROGRESS PRINT

NOT TO BE USED FOR CONSTRUCTION

04/06/2026

DATE PRINTED

© COPYRIGHT 2026 20252281

Permission to reproduce all or part of this drawing is hereby granted solely for the limited purpose of construction of this project or archiving. Unauthorized copying, disclosure or construction use without written permission of Alvine is prohibited by copyright law.

NOTE:

DO NOT SCALE DRAWINGS. VERIFY ALL DIMENSIONS and clearances from ARCHITECTURAL, STRUCTURAL, shop and other appropriate drawing or at site. Lay out and coordinate all work prior to installation to provide clearances required for operation, maintenance, and codes and verify non-interference with other work. DO NOT FABRICATE PRIOR TO VERIFICATION OF CLEARANCE FOR ALL TRADES. READ SPECIFICATIONS.

Alvine
1201 Cass St.
Omaha, NE 68102
402.346.7007

PRELIMINARY

HightJackson ASSOCIATES
5201 W Village Parkway, Suite 300 | Rogers, Arkansas 72758 | (479) 464-4965 | www.hjarch.com

BWHS ARTS ADDITION

1351 GAMBLE RD CENTERTON, AR

DRAWN BY. SCL

CHECK BY. JLH

ISSUE DATE 04/06/2026

PROJECT NO. 2421

REVISION DATES

TECHNOLOGY SYMBOLS AND ABBREVIATIONS

S H E E T

T0.1

THESE DRAWINGS AND SPECIFICATIONS ARE THE EXCLUSIVE PROPERTY OF HIGHT JACKSON ASSOCIATES PA. USE OR REPRODUCTION IS PROHIBITED WITHOUT WRITTEN CONSENT.

AUDIOVISUAL INFRASTRUCTURE SCHEDULE

MARK	DEVICE FUNCTION	JUNCTION BOX DESCRIPTION	JUNCTION BOX MAKE	JUNCTION BOX MODEL	MOUNTING STYLE	CONDUIT SIZE	REFERENCE DETAIL	NOTES	JUNCTION BOX DIMENSIONS		
									LENGTH	WIDTH	DEPTH
AV1	SURFACE MOUNT LOUDSPEAKER	RECESSED JUNCTION BOX W/ RAISED 1-GANG TRIM RING	RACO	674 OR EQUIVALENT	154" AFF - FLUSH (UNO)	(1) 1"	-	-	4"	2"	2 1/8"
AV2	AV VIDEO INPUT PLATE/BLUETOOTH INTERFACE	RECESSED JUNCTION BOX W/ RAISED 2-GANG TRIM RING	RACO	259 OR EQUIVALENT	18" AFF - FLUSH (UNO)	(1) 1"	-	-	4 11/16"	4 11/16"	2 1/8"
AV3	AVB INTERFACE PLATE	RECESSED JUNCTION BOX W/ RAISED 1-GANG TRIM RING	RACO	259 OR EQUIVALENT	18" AFF - FLUSH (UNO)	(1) 1-1/4	-	-	4 11/16"	4 11/16"	2 1/8"
AV4	CONTROL PANEL	RECESSED JUNCTION BOX W/ RAISED 2-GANG TRIM RING	RACO	259 OR EQUIVALENT	46" AFF - FLUSH (UNO)	(1) 1"	-	-	4 11/16"	4 11/16"	2 1/8"
AV5	AUDIO LEVEL CONTROLLER	RECESSED JUNCTION BOX W/ RAISED 1-GANG TRIM RING	RACO	674 OR EQUIVALENT	46" AFF - FLUSH (UNO)	(1) 1"	-	-	4"	2"	2 1/8"
AV6	BLUETOOTH INTERFACE	RECESSED JUNCTION BOX W/ RAISED 1-GANG TRIM RING	RACO	674 OR EQUIVALENT	46" AFF - FLUSH (UNO)	(1) 1"	-	-	4"	2"	2 1/8"
AV7	CEILING MICROPHONE BOX	SURFACE JUNCTION BOX	RACO	259 OR EQUIVALENT	MOUNT TO DECK	(1) 1"	-	-	4 11/16"	4 11/16"	2 1/8"

TECHNOLOGY POWER COORDINATION SCHEDULE

MARK	FUNCTION	VOLTS	PHASE	CIRCUIT BREAKER (AMPS)	NEMA	DESCRIPTION	DEDICATED CIRCUIT	ADDITIONAL REQUIREMENTS	MOUNTING STYLE	REFERENCE DETAIL	NOTES

PRELIMINARY

Hight Jackson ASSOCIATES
5201 W Village Parkway, Suite 300 ı Rogers, Arkansas 72758 ı (479) 464-4965 ı www.hjarch.com

BWHS ARTS ADDITION
1351 GAMBLE RD CENTERTON, AR

PROGRESS PRINT
NOT TO BE USED FOR CONSTRUCTION
04/06/2026
DATE PRINTED

© COPYRIGHT 2026 20252281
Permission to reproduce all or part of this drawing is hereby granted solely for the limited purpose of construction of this project or archiving. Unauthorized copying, disclosure or construction use without written permission of Alvine is prohibited by copyright law.

NOTE:
DO NOT SCALE DRAWINGS. VERIFY ALL DIMENSIONS and clearances from ARCHITECTURAL, STRUCTURAL, shop and other appropriate drawing or at site. Lay out and coordinate all work prior to installation to provide clearances required for operation, maintenance, and codes and verify non-interference with other work. DO NOT FABRICATE PRIOR TO VERIFICATION OF CLEARANCE FOR ALL TRADES. READ SPECIFICATIONS.

Alvine
1201 Cass St.
Omaha, NE 68102
402.346.7007

DRAWN BY.
SCL
CHECK BY.
JLH
ISSUE DATE
04/06/2026
PROJECT NO.
2421
REVISION DATES

TECHNOLOGY SCHEDULES

S H E E T
T0.2

THESE DRAWINGS AND SPECIFICATIONS ARE THE EXCLUSIVE PROPERTY OF HIGHT JACKSON ASSOCIATES PA. USE OR REPRODUCTION IS PROHIBITED WITHOUT WRITTEN CONSENT.

PROJECTION SCREEN TYPE SCHEDULE

ALL DIMENSIONS IN INCHES / WEIGHT IN POUNDS

TYPE	IMAGE SIZE			CASE SIZE			WEIGHT	INSTALLATION	OPERATION	MAKE & MODEL	IMAGE SURFACE MATERIAL	CONTROL	REFERENCE DETAIL
	DIAGONAL	HEIGHT	WIDTH	HEIGHT	WIDTH	DEPTH							
1	189"	100"	160"	12"	168"	12"		WALL SURFACE MOUNTED	MOTORIZED	DA-LITE - TENSIONED ADVANTAGE ELECTROL	MATT WHITE	TOUCH PANEL INTERFACE	1/T4.0

PROJECTOR & DISPLAY MOUNTING STYLE SCHEDULE

MOUNTING STYLE	INSTALLATION	REFERENCE DETAIL
1	CEILING MOUNT PROJECTOR	x/TAxx
2	CEILING LIFT MOUNTED PROJECTOR	x/TAxx
a	WALL MOUNT DISPLAY	x/TAxx
b	CEILING MOUNT DISPLAY	x/TAxx
c	CART MOUNT DISPLAY	x/TAxx
d	TABLE MOUNT DISPLAY	x/TAxx

CEILING MOUNTED VIDEO PROJECTION SCREEN & PROJECTOR LAYOUT (TYP.) - PLAN VIEW

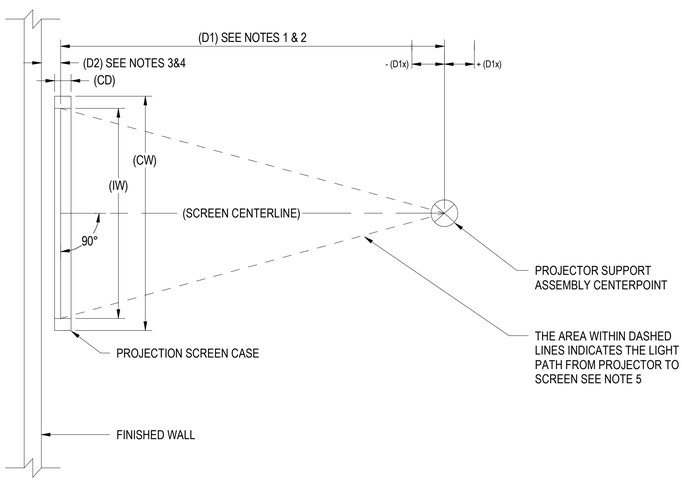

CEILING MOUNTED VIDEO PROJECTION SCREEN & PROJECTION LAYOUT (TYP.) - SECTION

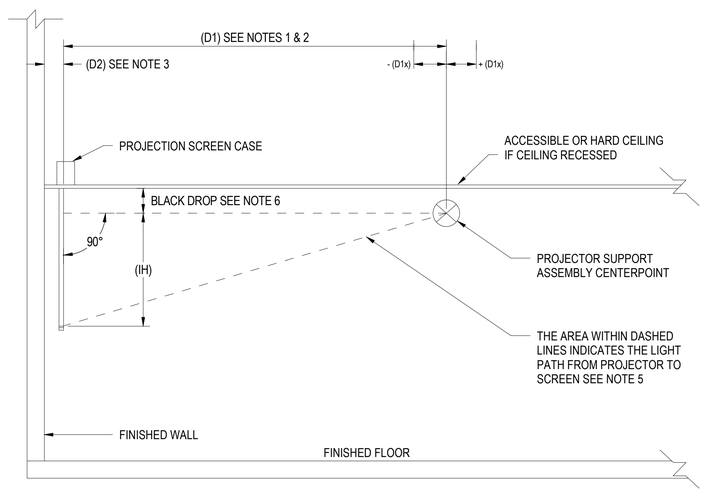

CEILING MOUNTED VIDEO PROJECTION SCREEN (TYP.) (AUDIENCE VIEW)

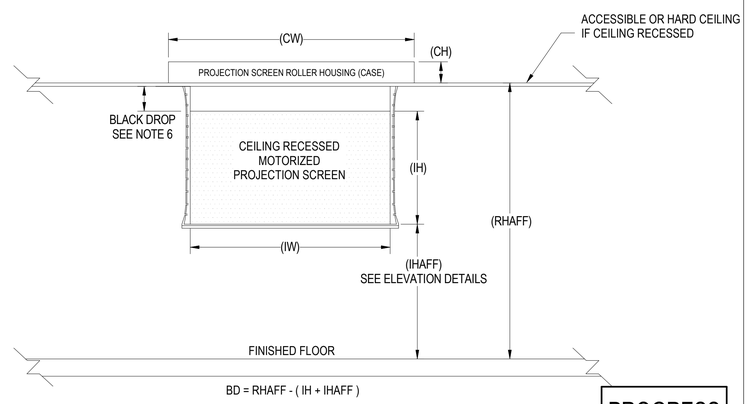

PROJECTION SCREEN / VIDEO PROJECTOR RELATIONSHIP NOTES:

1. [D1]: !!! CRITICAL DISTANCE !!! - D1 IS THE DISTANCE FROM THE PROJECTION SCREEN SURFACE TO THE CENTER OF THE PROJECTOR CEILING MOUNT ASSEMBLY. IF DISTANCE (D2) MUST BE INCREASED FOR ANY REASON, DISTANCE (D1) MUST BE MAINTAINED.
2. [D1x]: IS THE ALLOWABLE +/- VARIANCE IN DISTANCE OF [D1] TO ACCOMMODATE STRUCTURAL OR OTHER OBSTRUCTIONS. EXAMPLE: IF D1 = 300" AND D1X = 10" THEN THE CENTER OF THE PROJECTOR CEILING MOUNT MAY BE LOCATED BETWEEN 290" TO 310" ON SCREEN CENTERLINE FROM THE PROJECTION SCREEN SURFACE.
3. [D2]: IS THE MINIMUM DISTANCE FROM THE PROJECTION WALL TO THE PROJECTION SCREEN SURFACE. IF DISTANCE D2 MUST BE INCREASED TO ACCOMMODATE STRUCTURAL OR OTHER OBSTRUCTIONS TO A DISTANCE GREATER THAN D2 + D2x CONTACT THE CONSULTANT FOR FURTHER INSTRUCTIONS
4. [D2x]: IS THE ALLOWABLE +/- VARIANCE IN DISTANCE OF D2 TO ACCOMMODATE STRUCTURAL OR OTHER OBSTRUCTIONS. EXAMPLE: IF D2 = 6" AND D2x = 2" THEN THE PROJECTION SCREEN SURFACE MAY BE LOCATED BETWEEN 4" TO 8" ON SCREEN CENTERLINE FROM THE PROJECTION WALL.
5. THE PROJECTOR MUST ALWAYS HAVE A CLEAR VIEW OF THE ENTIRE SCREEN IMAGE AREA WITHOUT OBSTRUCTIONS.
6. [BLACK DROP]: THE AMOUNT OF BLACK DROP (BD) LISTED IN THE ROOM PROJECTION SCREEN SCHEDULE IS A DESIGN ESTIMATE. BLACK DROP REQUIREMENTS SHALL BE FIELD VERIFIED PER SCREEN INSTANCE PRIOR TO ISSUING SUBMITTALS. THE AMOUNT OF BLACK DROP (BD) REQUIRED IS DETERMINED BY ADDING THE ELEVATION OF THE BOTTOM OF THE IMAGE ABOVE FINISHED FLOOR (IHAFF) TO THE IMAGE HEIGHT (IH) AND SUBTRACTING THAT NUMBER FROM THE ELEVATION TO THE UNDERSIDE OF THE PROJECTION SCREEN ROLLER HOUSING CASE ABOVE FINISHED FLOOR (RHAFF). THE REMAINDER WILL BE THE AMOUNT OF REQUIRED BLACK DROP (SEE GRAPHIC ABOVE). THE AMOUNT OF EXCESS BLACK DROP MATERIAL REMAINING ON THE PROJECTION SCREEN ROLLER, WHEN THE SCREEN IS DEPLOYED TO ITS SPECIFIED BOTTOM OF IMAGE HEIGHT ABOVE FINISHED FLOOR ELEVATION, SHOULD NEVER EXCEED MORE THAN ONE WRAP. IN INSTANCES WHERE CEILING HEIGHT VARIES IN THE FIELD FROM THE DRAWINGS, THE SPECIFIED IMAGE HEIGHT ABOVE FINISHED FLOOR RULES.
7. LOCATE THE PROJECTION SCREEN POWER JUNCTION BOX ON THE SAME SIDE OF THE SCREEN AS SCREEN ELECTRICAL CONNECTIONS WHICH MAY VARY BY SCREEN TYPE. VERIFY LOCATION PRIOR TO INSTALLATION.

1 / T0.3 DETAIL - TYPICAL PROJECTION SCREEN
NO SCALE

PRELIMINARY

PROGRESS PRINT
NOT TO BE USED FOR CONSTRUCTION
04/06/2026
DATE PRINTED

© COPYRIGHT 2026 20252281
Permission to reproduce all or part of this drawing is hereby granted solely for the limited purpose of construction of this project or archiving. Unauthorized copying, disclosure or construction use without written permission of Alvine is prohibited by copyright law.

NOTE:
DO NOT SCALE DRAWINGS. VERIFY ALL DIMENSIONS and clearances from ARCHITECTURAL, STRUCTURAL, shop and other appropriate drawing or at site. Lay out and coordinate all work prior to installation to provide clearances required for operation, maintenance, and codes and verify non-interference with other work. DO NOT FABRICATE PRIOR TO VERIFICATION OF CLEARANCE FOR ALL TRADES. READ SPECIFICATIONS.

Alvine
1201 Cass St.
Omaha, NE 68102
402.346.7007

HightJackson ASSOCIATES
5201 W Village Parkway, Suite 300 | Rogers, Arkansas 72758 | (479) 464-4965 | www.hjarch.com

BWHS ARTS ADDITION
1351 GAMBLE RD CENTERTON, AR

DRAWN BY: SCL
CHECK BY: JLH
ISSUE DATE: 04/06/2026
PROJECT NO.: 2421
REVISION DATES

TECHNOLOGY SCHEDULES

SHEET
T0.3

THESE DRAWINGS AND SPECIFICATIONS ARE THE EXCLUSIVE PROPERTY OF HIGHT JACKSON ASSOCIATES PA. USE OR REPRODUCTION IS PROHIBITED WITHOUT WRITTEN CONSENT

FLAG NOTES:

1. LOCATION OF OWNER FURNISHED AUDIOVISUAL EQUIPMENT RACK.

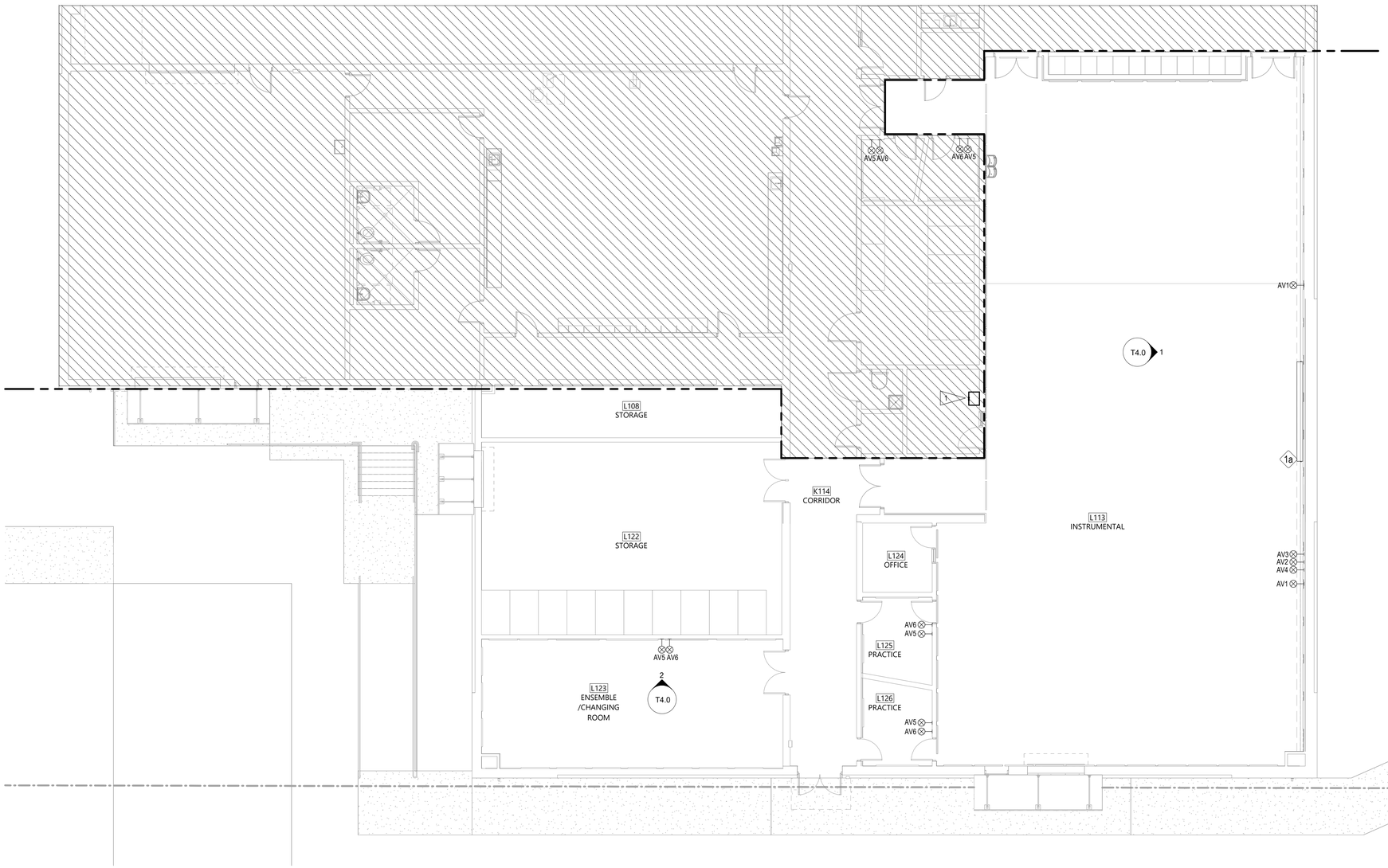

1 FIRST FLOOR PLAN - BAND ROOM - TECHNOLOGY

1/8" = 1'-0"

PROGRESS PRINT

NOT TO BE USED FOR CONSTRUCTION

04/06/2026

DATE PRINTED

© COPYRIGHT 2026 20252281

Permission to reproduce all or part of this drawing is hereby granted solely for the limited purpose of construction of this project or archiving. Unauthorized copying, disclosure or construction use without written permission of Alvine is prohibited by copyright law.

NOTE:

DO NOT SCALE DRAWINGS. VERIFY ALL DIMENSIONS and clearances from ARCHITECTURAL, STRUCTURAL, shop and other appropriate drawing or at site. Lay out and coordinate all work prior to installation to provide clearances required for operation, maintenance, and codes and verify non-interference with other work. DO NOT FABRICATE PRIOR TO VERIFICATION OF CLEARANCE FOR ALL TRADES. READ SPECIFICATIONS.

Alvine

1201 Cass St.
Omaha, NE 68102 402.346.7007

PRELIMINARY

Hight Jackson ASSOCIATES

5201 W Village Parkway, Suite 300 ı Rogers, Arkansas 72758 ı (479) 464-4965 ı www.hjarch.com

BWHS ARTS ADDITION

1351 GAMBLE RD CENTERTON, AR

DRAWN BY: SCL

CHECK BY: JLH

ISSUE DATE 04/06/2026

PROJECT NO. 2421

REVISION DATES

FIRST FLOOR PLAN - BAND ROOM - TECHNOLOGY

S H E E T

T1.1

THESE DRAWINGS AND SPECIFICATIONS ARE THE EXCLUSIVE PROPERTY OF HIGHT JACKSON ASSOCIATES PA. USE OR REPRODUCTION IS PROHIBITED WITHOUT WRITTEN CONSENT

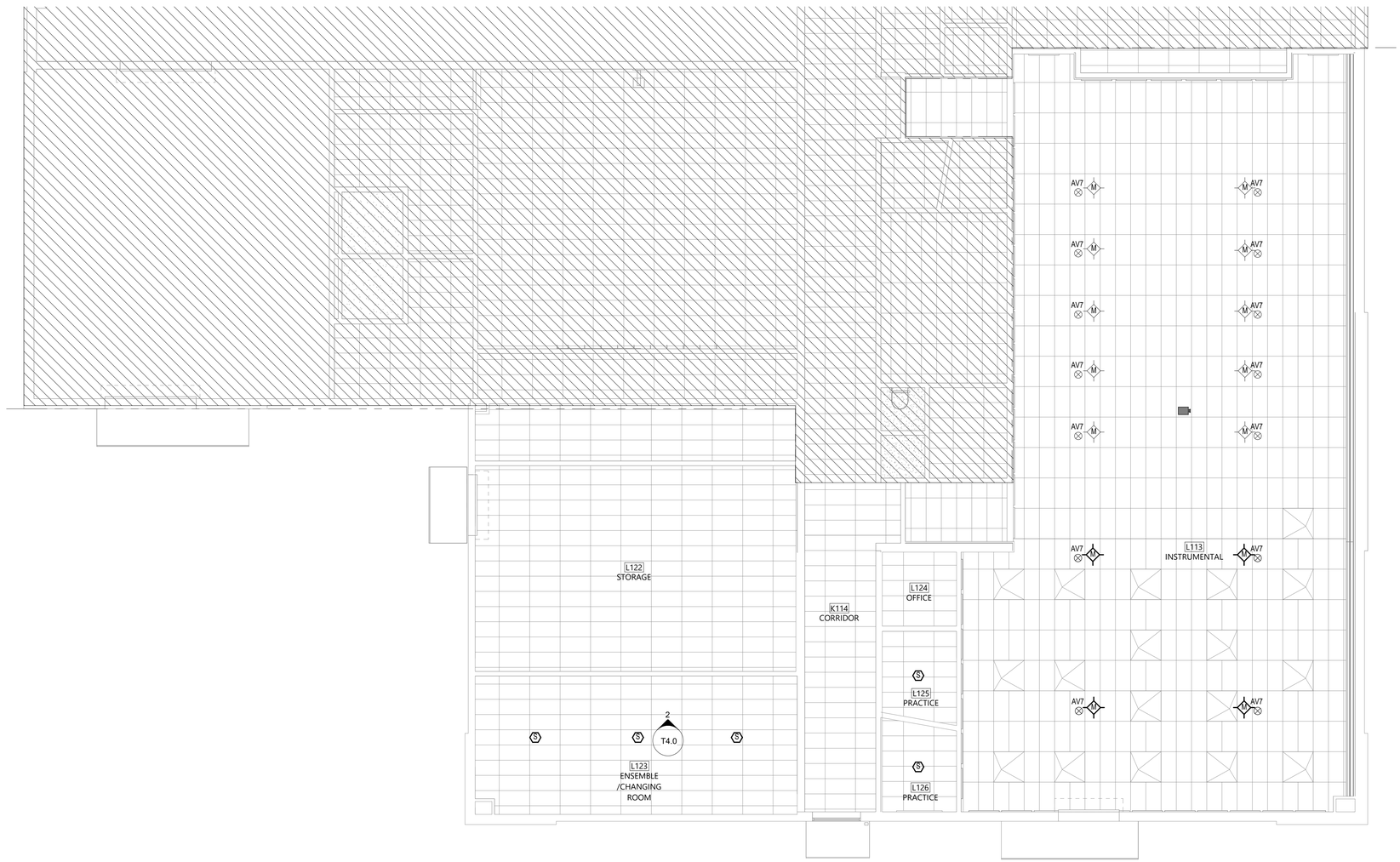

1 FIRST FLOOR REFLECTED CEILING PLAN - BAND ROOM - TECHNOLOGY

1/8" = 1'-0"

PRELIMINARY

Hight Jackson ASSOCIATES
5201 W Village Parkway, Suite 300 ı Rogers, Arkansas 72758 ı (479) 464-4965 ı www.hjarch.com

BWHS ARTS ADDITION

1351 GAMBLE RD CENTERTON, AR

PROGRESS PRINT

NOT TO BE USED FOR CONSTRUCTION

04/06/2026

DATE PRINTED

© COPYRIGHT 2026 20252281

Permission to reproduce all or part of this drawing is hereby granted solely for the limited purpose of construction of this project or archiving. Unauthorized copying, disclosure or construction use without written permission of Alvine is prohibited by copyright law.

NOTE:

DO NOT SCALE DRAWINGS. VERIFY ALL DIMENSIONS and clearances from ARCHITECTURAL, STRUCTURAL, shop and other appropriate drawing or at site. Lay out and coordinate all work prior to installation to provide clearances required for operation, maintenance, and codes and verify non-interference with other work. DO NOT FABRICATE PRIOR TO VERIFICATION OF CLEARANCE FOR ALL TRADES. READ SPECIFICATIONS.

Alvine
1201 Cass St.
Omaha, NE 68102
402.346.7007

DRAWN BY: SCL

CHECK BY: JLH

ISSUE DATE 04/06/2026

PROJECT NO. 2421

REVISION DATES

FIRST FLOOR REFLECTED CEILING PLAN - BAND ROOM - TECHNOLOGY

S H E E T

T2.1

THESE DRAWINGS AND SPECIFICATIONS ARE THE EXCLUSIVE PROPERTY OF HIGHT JACKSON ASSOCIATES PA. USE OR REPRODUCTION IS PROHIBITED WITHOUT WRITTEN CONSENT

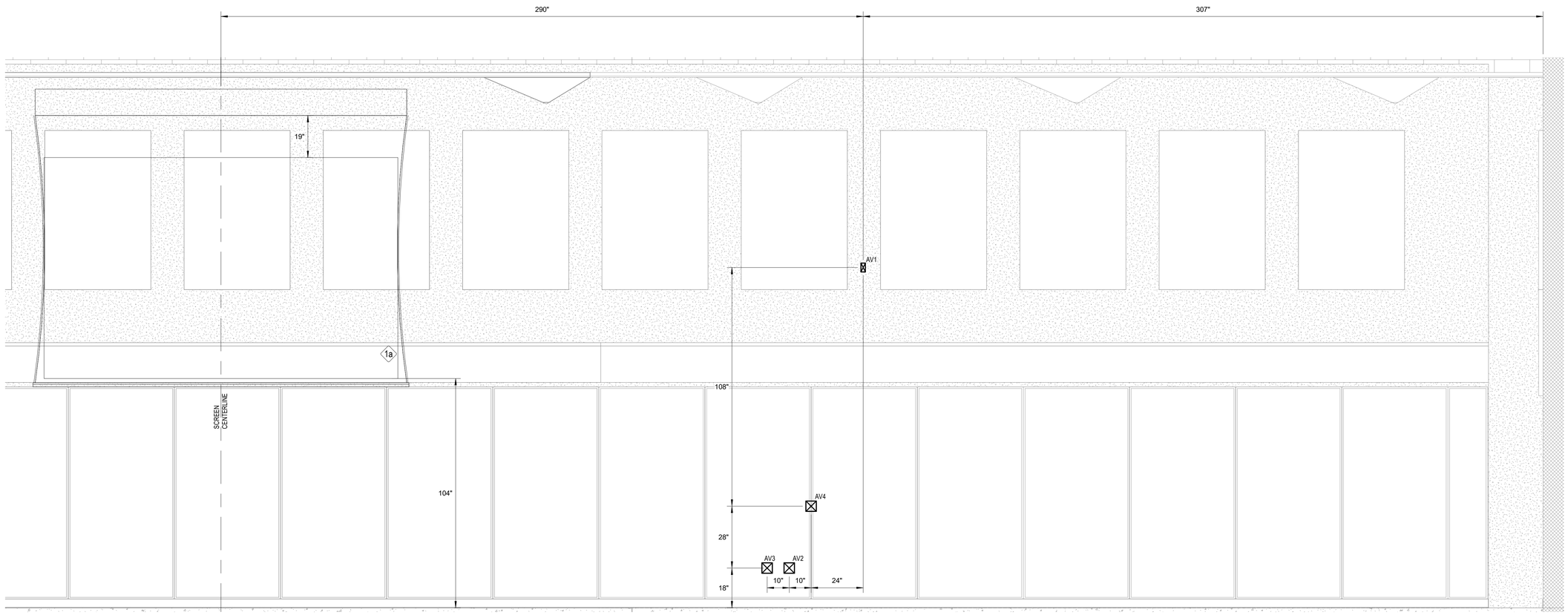

1 L113 INSTRUMENTAL
1/2" = 1'-0"

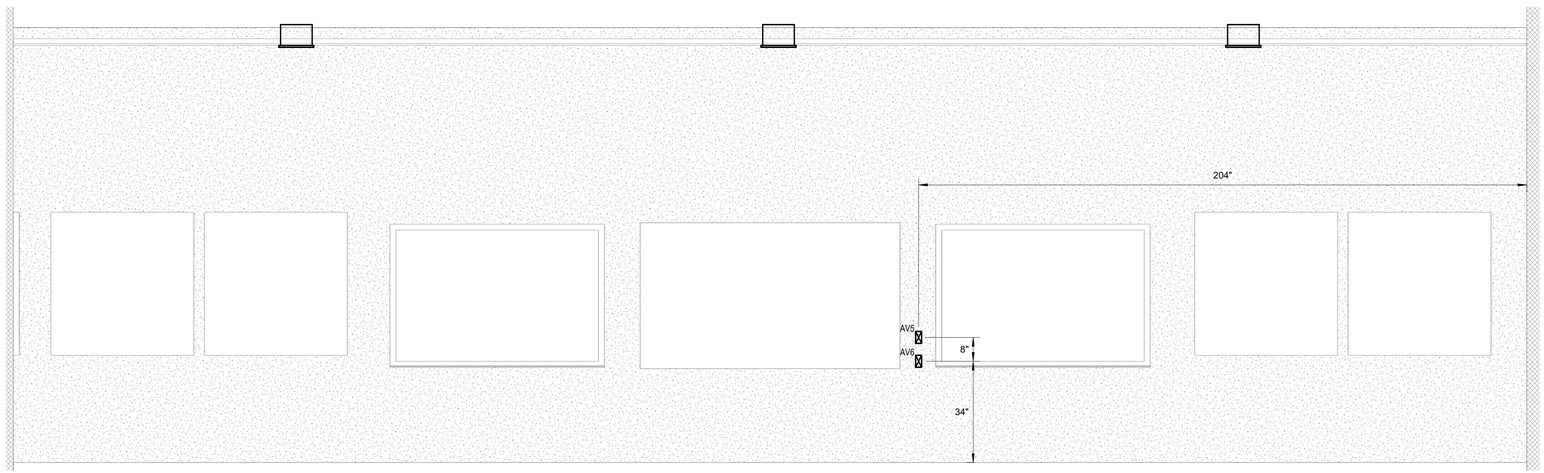

2 L123 ENSEMBLE
1/2" = 1'-0"

PROGRESS PRINT
NOT TO BE USED FOR CONSTRUCTION
04/06/2026
DATE PRINTED

© COPYRIGHT 2026 20252281
Permission to reproduce all or part of this drawing is hereby granted solely for the limited purpose of construction of this project or archiving. Unauthorized copying, disclosure or construction use without written permission of Alvine is prohibited by copyright law.

NOTE:
DO NOT SCALE DRAWINGS. VERIFY ALL DIMENSIONS and clearances from ARCHITECTURAL, STRUCTURAL, shop and other appropriate drawing or at site. Lay out and coordinate all work prior to installation to provide clearances required for operation, maintenance, and codes and verify non-interference with other work. DO NOT FABRICATE PRIOR TO VERIFICATION OF CLEARANCE FOR ALL TRADES. READ SPECIFICATIONS.

Alvine
1201 Cass St.
Omaha, NE 68102 402.346.7007

PRELIMINARY

Hight Jackson ASSOCIATES
5201 W Village Parkway, Suite 300 ı Rogers, Arkansas 72758 ı (479) 464-4965 ı www.hjarch.com

BWHS ARTS ADDITION
1351 GAMBLE RD CENTERTON, AR

DRAWN BY: SCL
CHECK BY: JLH
ISSUE DATE: 04/06/2026
PROJECT NO.: 2421
REVISION DATES

TECHNOLOGY ELEVATIONS
SHEET
T4.0

THESE DRAWINGS AND SPECIFICATIONS ARE THE EXCLUSIVE PROPERTY OF HIGHT JACKSON ASSOCIATES PA. USE OR REPRODUCTION IS PROHIBITED WITHOUT WRITTEN CONSENT

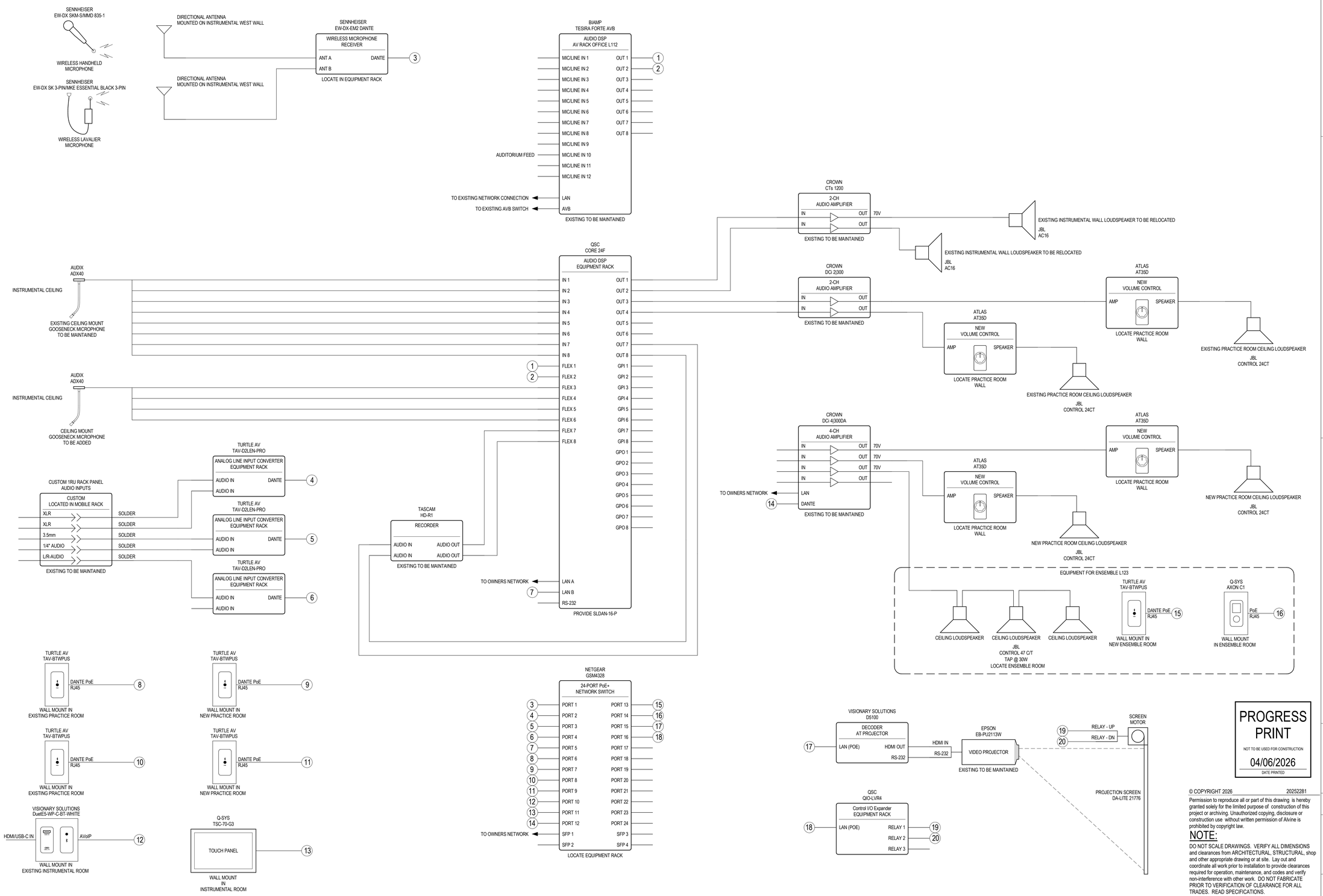

1
T7.0
BAND / ENSEMBLE ROOM
NO SCALE

PRELIMINARY

PROGRESS PRINT
NOT TO BE USED FOR CONSTRUCTION
04/06/2026
DATE PRINTED

© COPYRIGHT 2026 20252281
Permission to reproduce all or part of this drawing is hereby granted solely for the limited purpose of construction of this project or archiving. Unauthorized copying, disclosure or construction use without written permission of Alvine is prohibited by copyright law.

NOTE:
DO NOT SCALE DRAWINGS. VERIFY ALL DIMENSIONS and clearances from ARCHITECTURAL, STRUCTURAL, shop and other appropriate drawing or at site. Lay out and coordinate all work prior to installation to provide clearances required for operation, maintenance, and codes and verify non-interference with other work. DO NOT FABRICATE PRIOR TO VERIFICATION OF CLEARANCE FOR ALL TRADES. READ SPECIFICATIONS.

Alvine
1201 Cass St.
Omaha, NE 68102
402.346.7007

Hight Jackson ASSOCIATES
5201 W Village Parkway, Suite 300 | Rogers, Arkansas 72758 | (479) 464-4965 | www.hjarch.com

BWHS ARTS ADDITION
1351 GAMBLE RD CENTERTON, AR

DRAWN BY.
Author
CHECK BY.
Checker
ISSUE DATE
04/06/2026
PROJECT NO.
2421
REVISION DATES

AUDIOVISUAL SCHEMATICS, RACK ELEVATIONS, PLATES AND PANELS SHEET
T7.0

THESE DRAWINGS AND SPECIFICATIONS ARE THE EXCLUSIVE PROPERTY OF HIGHT JACKSON ASSOCIATES PA. USE OR REPRODUCTION IS PROHIBITED WITHOUT WRITTEN CONSENT

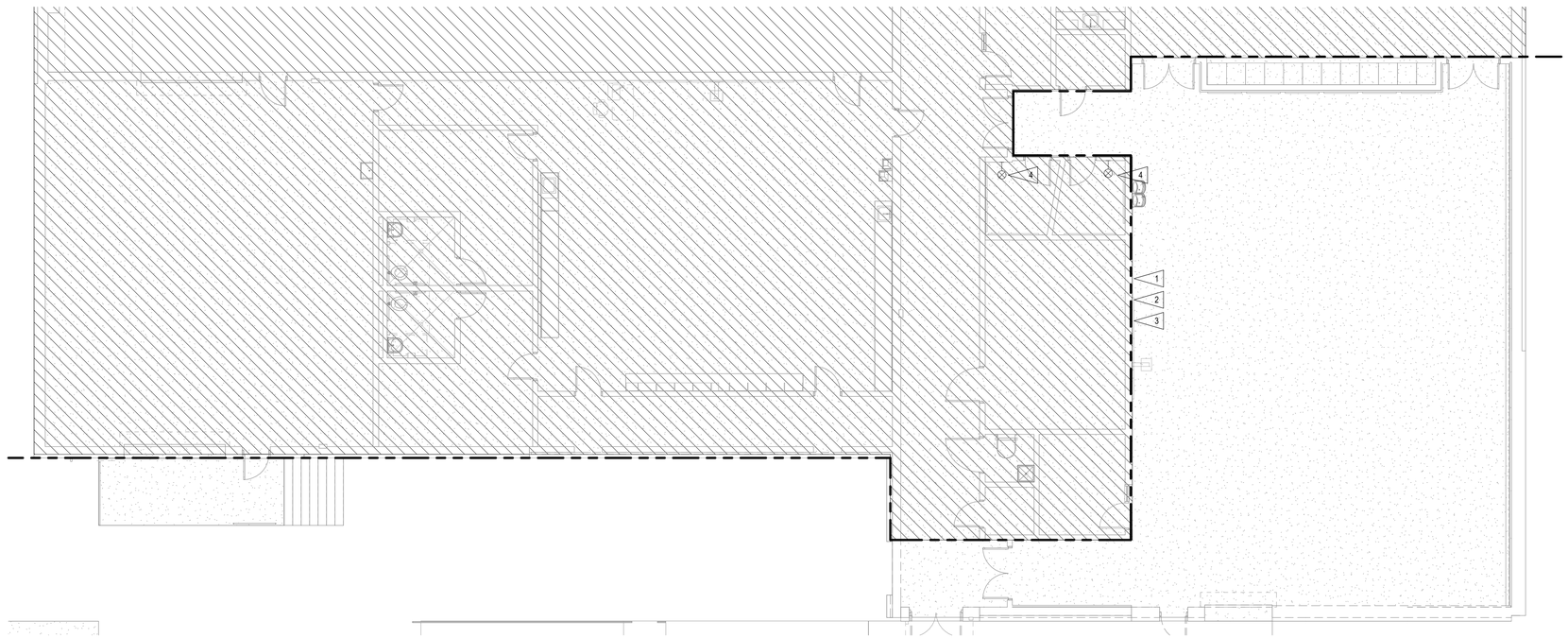

1 FIRST FLOOR PLAN - BAND ROOM - TECHNOLOGY DEMOLITION
1/8" = 1'-0"

GENERAL NOTES:

A. ALL AUDIOVISUAL EQUIPMENT THAT IS REMOVED AND NOT REUSED AS A PART OF THIS PROJECT SHALL BE RETURNED TO THE OWNER IN THE SAME CONDITION AS THE TIME OF REMOVAL.

FLAG NOTES:

1. EXISTING PROJECTOR AND SCREEN TO BE REMOVED AND REPLACED. REFER TO FLOOR PLANS FOR ADDITIONAL INFORMATION.
2. EXISTING WALL MOUNT SPEAKERS TO BE RELOCATED TO OPPOSITE WALL. REFER TO FLOOR PLANS FOR ADDITIONAL INFORMATION.
3. EXISTING DISPLAY TO BE REMOVED.
4. EXISTING ANALOG CONNECTIONS TO BE REMOVED AND REPLACED. REFER TO FLOOR PLANS AND SYSTEM SCHEMATICS FOR MORE INFORMATION.

PRELIMINARY

PROGRESS PRINT
NOT TO BE USED FOR CONSTRUCTION
04/06/2026
DATE PRINTED

© COPYRIGHT 2026 20252281
Permission to reproduce all or part of this drawing is hereby granted solely for the limited purpose of construction of this project or archiving. Unauthorized copying, disclosure or construction use without written permission of Alvine is prohibited by copyright law.

NOTE:

DO NOT SCALE DRAWINGS. VERIFY ALL DIMENSIONS and clearances from ARCHITECTURAL, STRUCTURAL, shop and other appropriate drawing or at site. Lay out and coordinate all work prior to installation to provide clearances required for operation, maintenance, and codes and verify non-interference with other work. DO NOT FABRICATE PRIOR TO VERIFICATION OF CLEARANCE FOR ALL TRADES. READ SPECIFICATIONS.

Alvine
1201 Cass St.
Omaha, NE 68102
402.346.7007

Hight Jackson ASSOCIATES
5201 W Village Parkway, Suite 300 ı Rogers, Arkansas 72758 ı (479) 464-4965 ı www.hjarch.com

BWHS ARTS ADDITION
1351 GAMBLE RD CENTERTON, AR

DRAWN BY: SCL
CHECK BY: JLH
ISSUE DATE 04/06/2026
PROJECT NO. 2421
REVISION DATES

FIRST FLOOR PLAN - BAND ROOM - TECHNOLOGY DEMOLITION
S H E E T
TD1.2

THESE DRAWINGS AND SPECIFICATIONS ARE THE EXCLUSIVE PROPERTY OF HIGHT JACKSON ASSOCIATES PA. USE OR REPRODUCTION IS PROHIBITED WITHOUT WRITTEN CONSENT

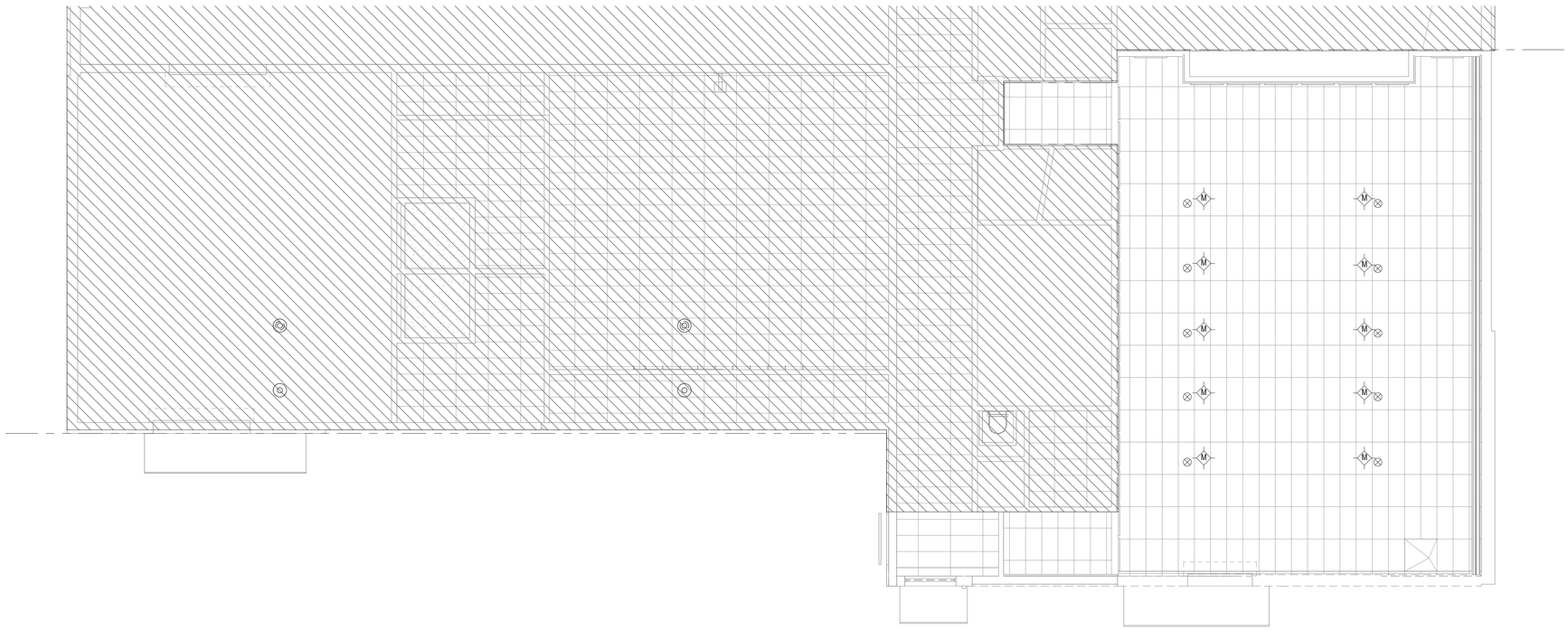

1 FIRST FLOOR REFLECTED CEILING PLAN - BAND ROOM - TECHNOLOGY DEMOLITION
1/8" = 1'-0"

PRELIMINARY

Hight Jackson ASSOCIATES
5201 W Village Parkway, Suite 300 | Rogers, Arkansas 72758 | (479) 464-4965 | www.hjarch.com

BWHS ARTS ADDITION
1351 GAMBLE RD CENTERTON, AR

PROGRESS PRINT
NOT TO BE USED FOR CONSTRUCTION
04/06/2026
DATE PRINTED

DRAWN BY.
SCL
CHECK BY.
JLH
ISSUE DATE
04/06/2026
PROJECT NO.
2421
REVISION DATES

© COPYRIGHT 2026 20252281
Permission to reproduce all or part of this drawing is hereby granted solely for the limited purpose of construction of this project or archiving. Unauthorized copying, disclosure or construction use without written permission of Alvine is prohibited by copyright law.

NOTE:
DO NOT SCALE DRAWINGS. VERIFY ALL DIMENSIONS and clearances from ARCHITECTURAL, STRUCTURAL, shop and other appropriate drawing or at site. Lay out and coordinate all work prior to installation to provide clearances required for operation, maintenance, and codes and verify non-interference with other work. DO NOT FABRICATE PRIOR TO VERIFICATION OF CLEARANCE FOR ALL TRADES. READ SPECIFICATIONS.

Alvine
1201 Cass St.
Omaha, NE 68102
402.346.7007

FIRST FLOOR REFLECTED CEILING PLAN - BAND ROOM - TECHNOLOGY DEMOLITION

TD2.2

THESE DRAWINGS AND SPECIFICATIONS ARE THE EXCLUSIVE PROPERTY OF HIGHT JACKSON ASSOCIATES PA. USE OR REPRODUCTION IS PROHIBITED WITHOUT WRITTEN CONSENT